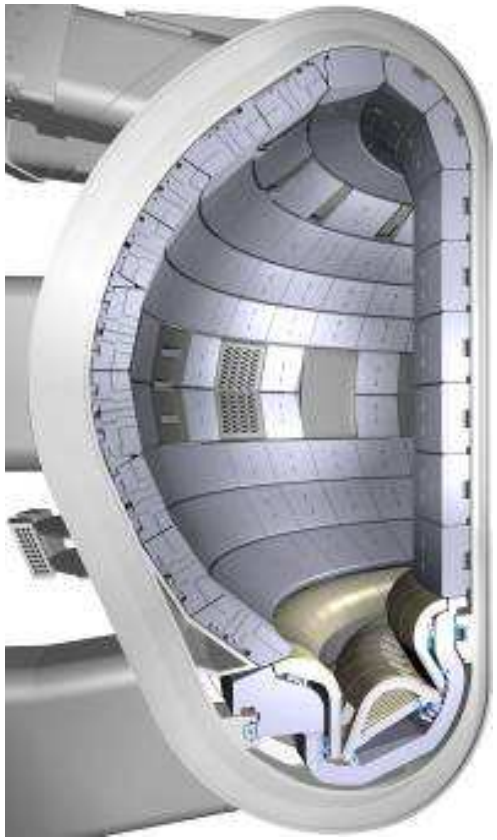

ITER CRYOGENICS

L. Serio
ITER Organization Headquarter
FRANCE

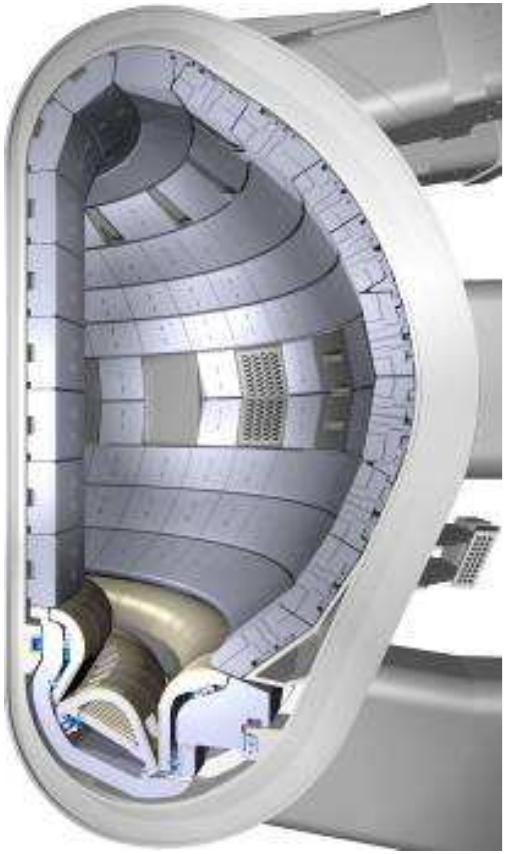

MATEFU Spring School 2009

Outline

- Introduction
- Cryogenics and superconductivity
- The ITER cryogenic system
- Key technological challenges
- Conclusions

ITER Key Facts

- The overall programmatic objective:

  to demonstrate the scientific and technological feasibility of fusion energy for peaceful purposes

- The principal goal: Q>10

  to produce a significant fusion power amplification (tenfold the energy input):

  input power 50 MW
  output power 500 MW

- The Costs:

  5 billion € for ten years of construction and 5 billion € for 20 years of operation and decommissioning

- The execution:

  ~90% of in kind contributions.

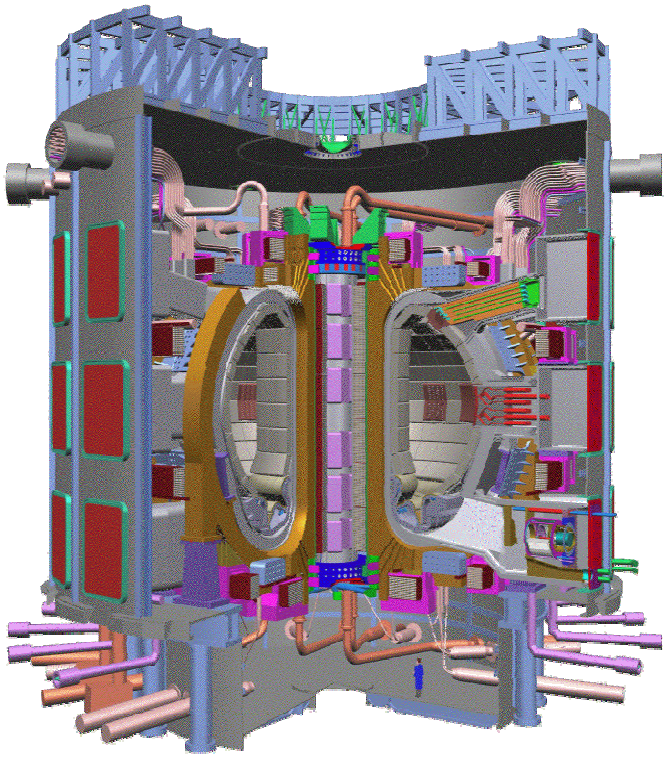

ITER is one of the most innovative and challenging scientific projects in the world today.

The Core of ITER

Central Solenoid
Nb_3Sn, 6 modules

Toroidal Field Coil
Nb_3Sn, 18, wedged

Poloidal Field Coil
Nb-Ti, 6

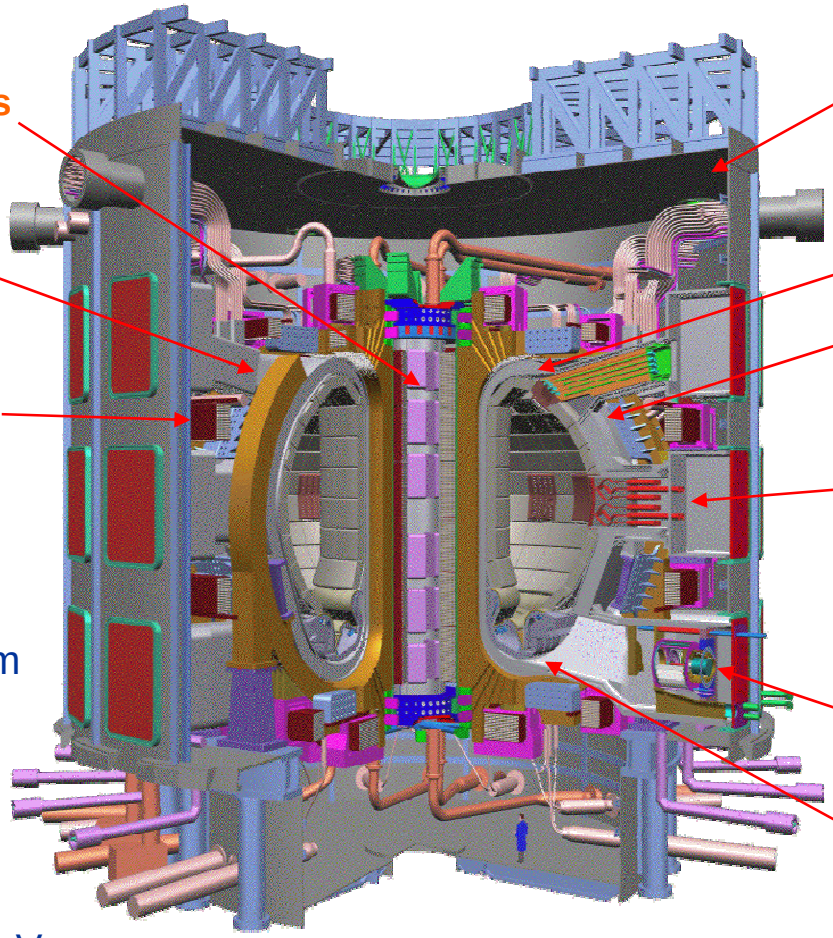

Cryostat
29 m high x 28 m dia.

Vacuum Vessel
9 sectors

Blanket
440 modules

Port Plug
heating/current drive, test blankets limiters/RH diagnostics

Torus Cryopumps, 8

Divertor
54 cassettes

Major Plasma Radius 6.2 m

Plasma Volume: 840 m^3

Plasma Current: 15 MA

Typical Density: 10^{20} m^{-3}

Typical Temperature: 20 keV

Fusion Power: 500 MW

Machine mass: 23,350 t (cryostat + VV + magnets)
- shielding, divertor and manifolds: 7,945 t + 1,060 port plugs
- magnet systems: 10,150 t; cryostat: 820 t

Role of cryogenics

- High fields magnets
- HTS current leads
- Cryogenic pumping

- Reduction of specific project cost
- Save energy

Critical current density of superconductors

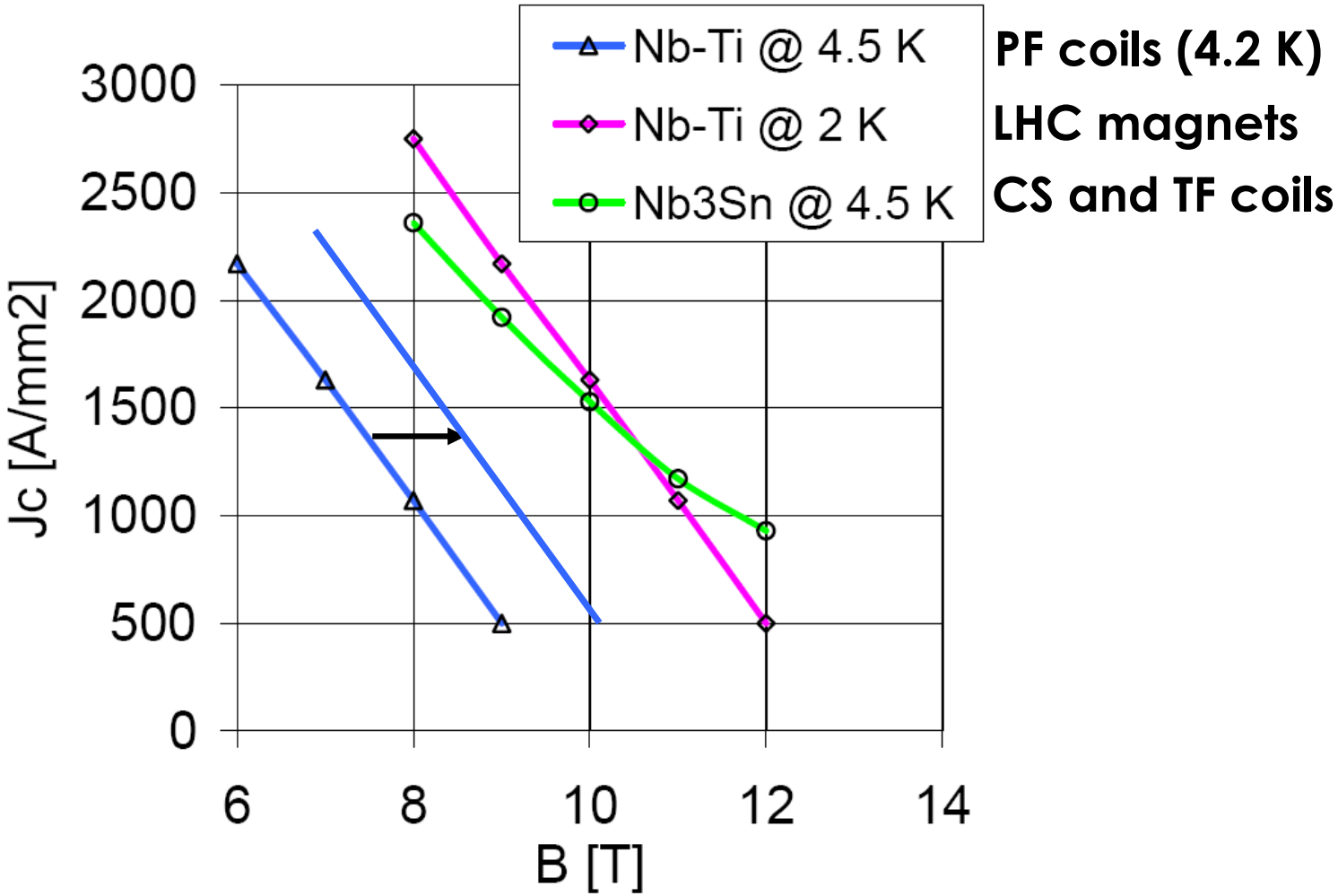

Courtesy Ph. Lebrun

Sorption and desorption of gases at cryogenic temperatures

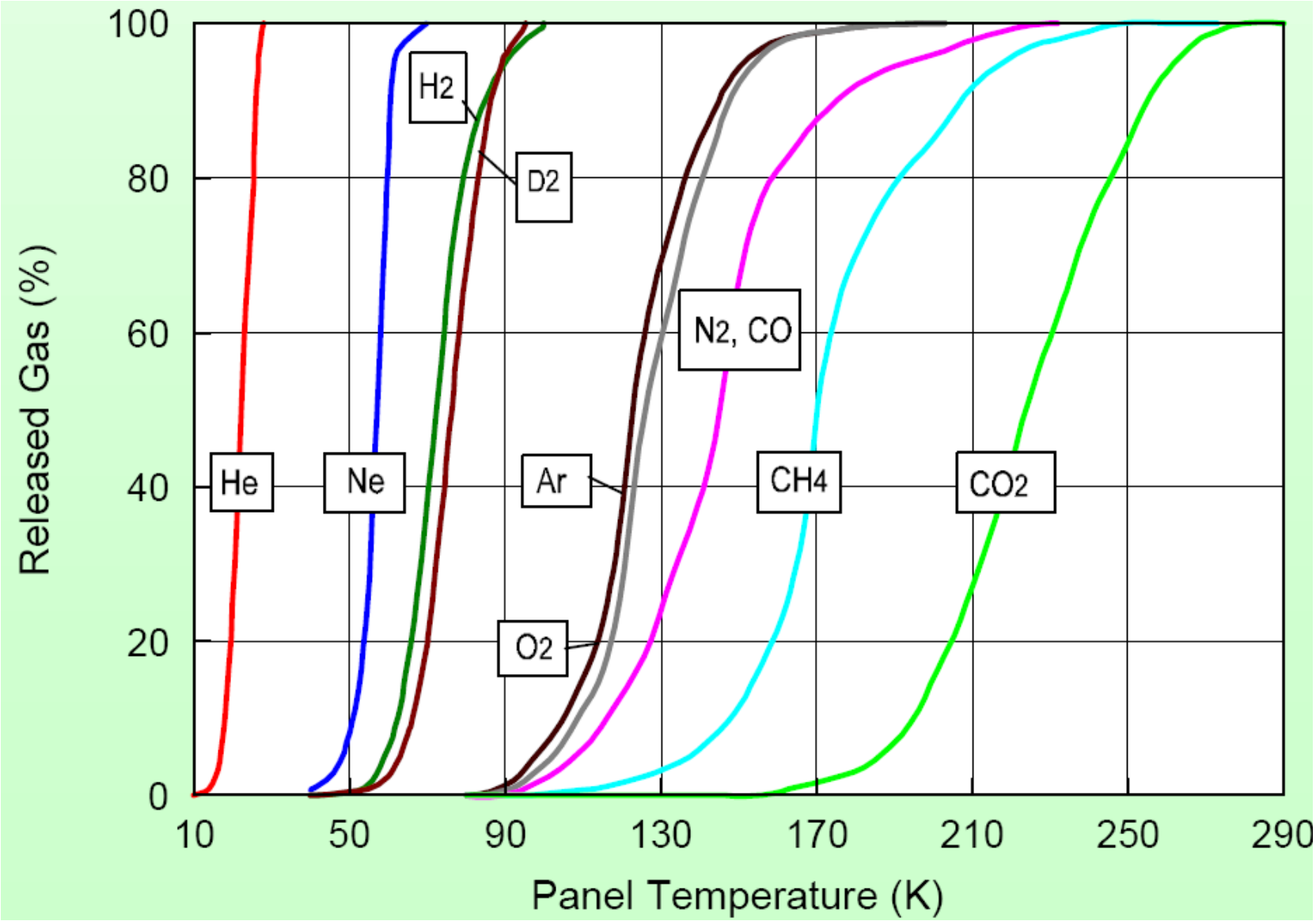

Phase Diagram of Helium

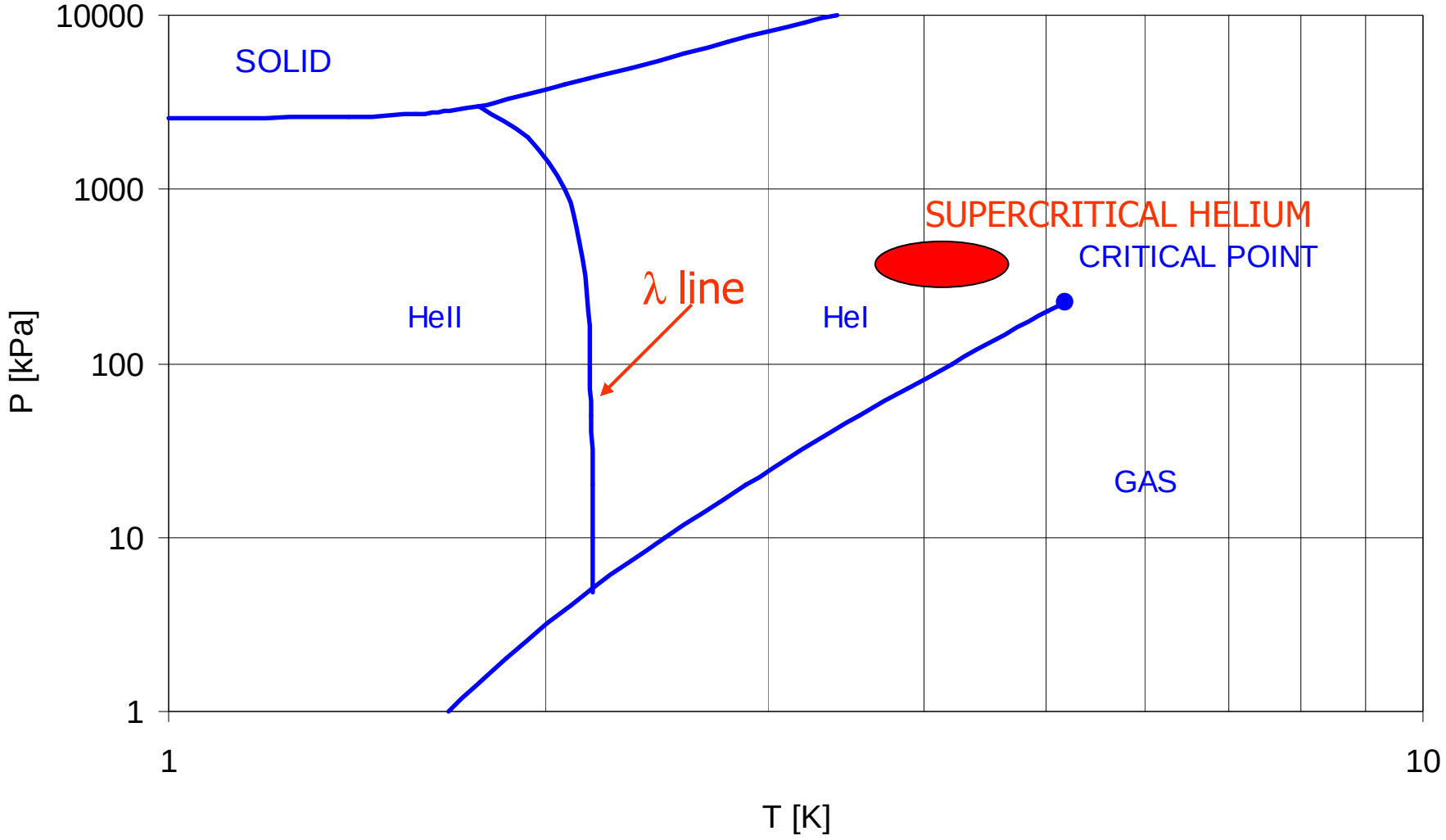

Courtesy Ph. Lebrun

Helium as a cooling fluid

Phase domain	Advantages	Drawbacks	
Saturated He I	Fixed temperature High heat transfer	Two-phase flow Boiling crisis	HX
Supercritical	Monophase Negative J-T effect	Non-isothermal Density wave instability	Forced flow
He II	Low temperature High conductivity Low viscosity	Second-law cost Subatmospheric	

Courtesy Ph. Lebrun

ITER cryogenics cooling principles

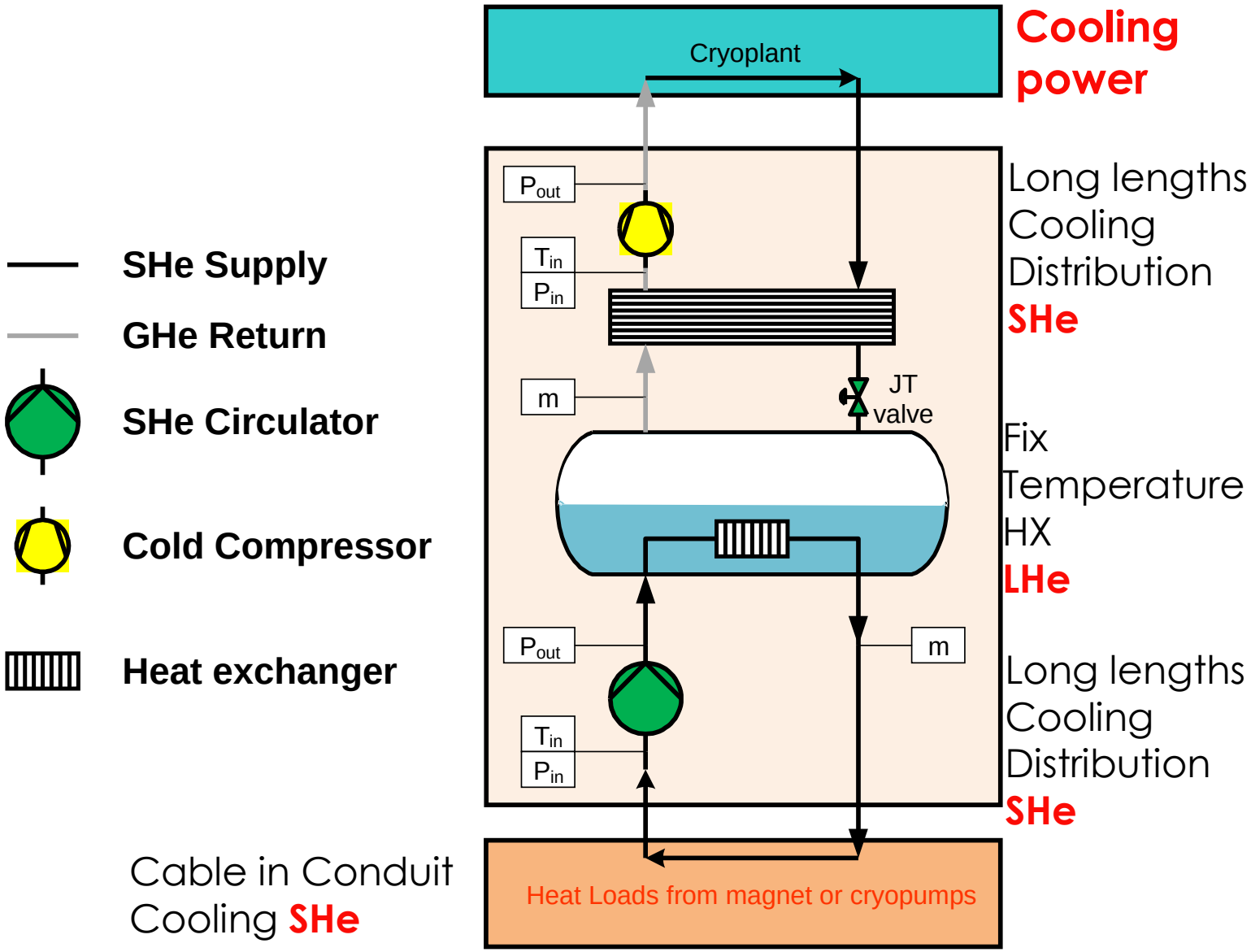

ITER cryogenics layout

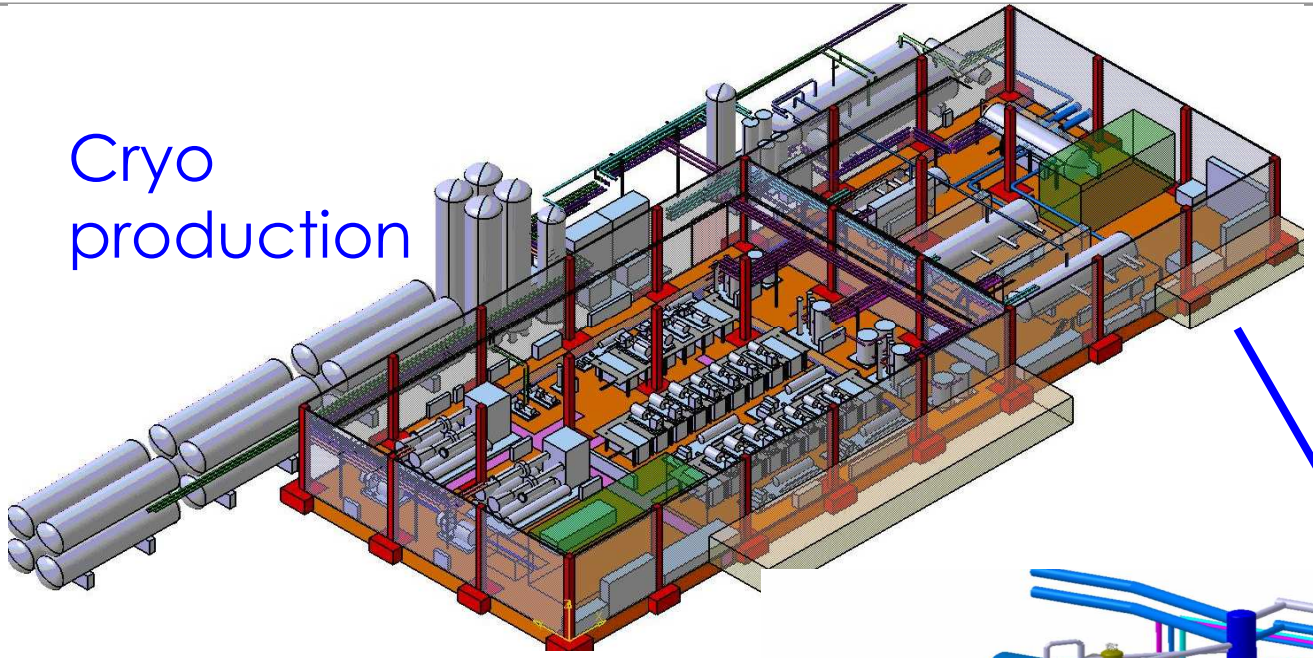

Cryo production

utilities
Cooling water
Electric power
CODAC
Compressed Air
Vacuum

Cryo distribution

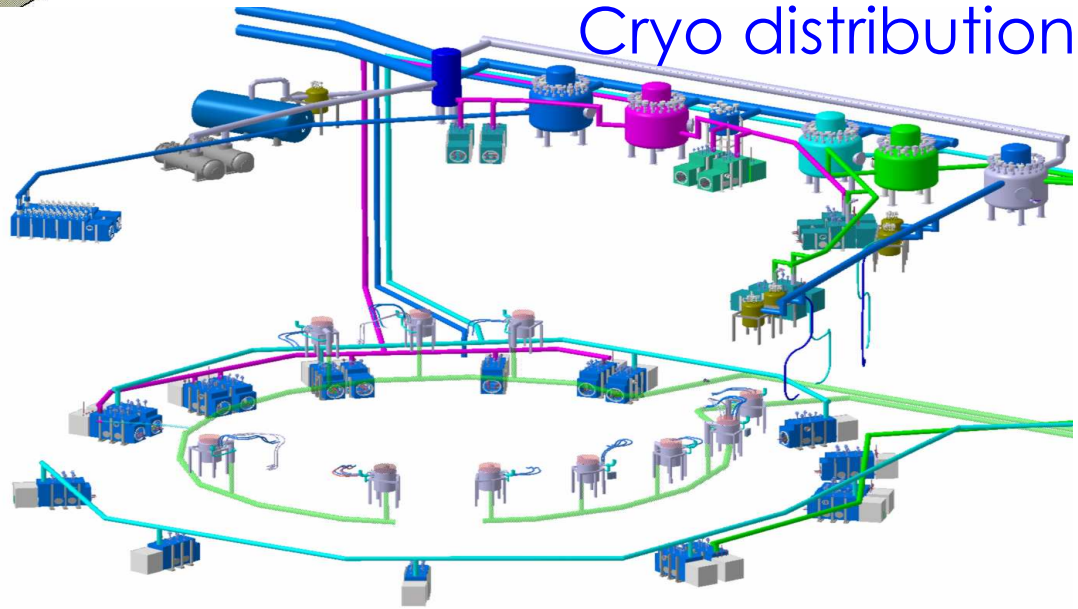

end users
Magnets
Cryopumps
Thermal shields
Small users

>50 Cold Boxes, 3 km of cryolines, 4500 components

What does the ITER cryogenic system need ?

✓ Electric power

about 30 MW; 22 GWh/month

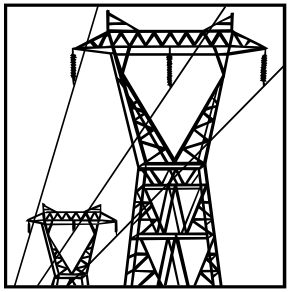

✓ Cooling and ventilation

2500 m³/h of water

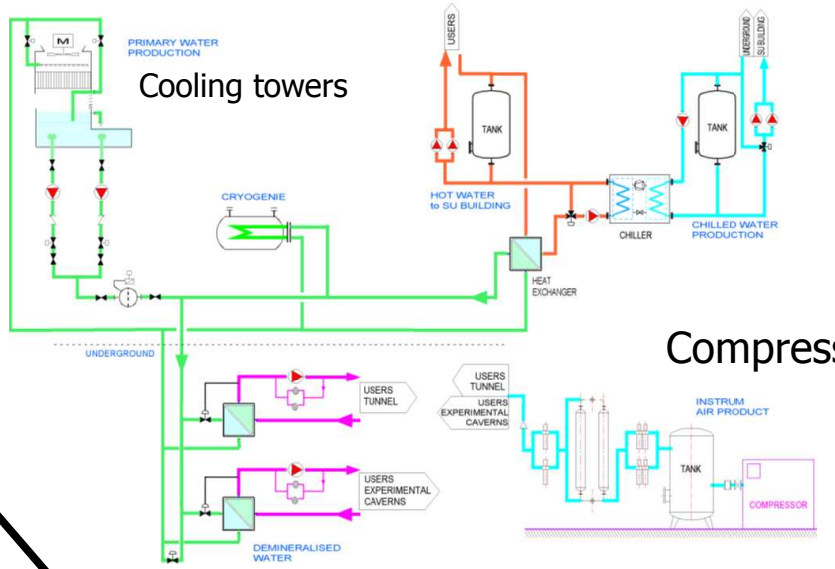

Compressed air

✓ Helium and nitrogen

24 t of He

dedicated LN2 refrigerator

CRYO

65 kW @ 4.5 K

1.3 MW @ 80 K

✓ Vacuum

10^{-2} mbar

✓ Controls:

Networks, fieldbuses, PLC, SCADA

Birdseye view of ITER site

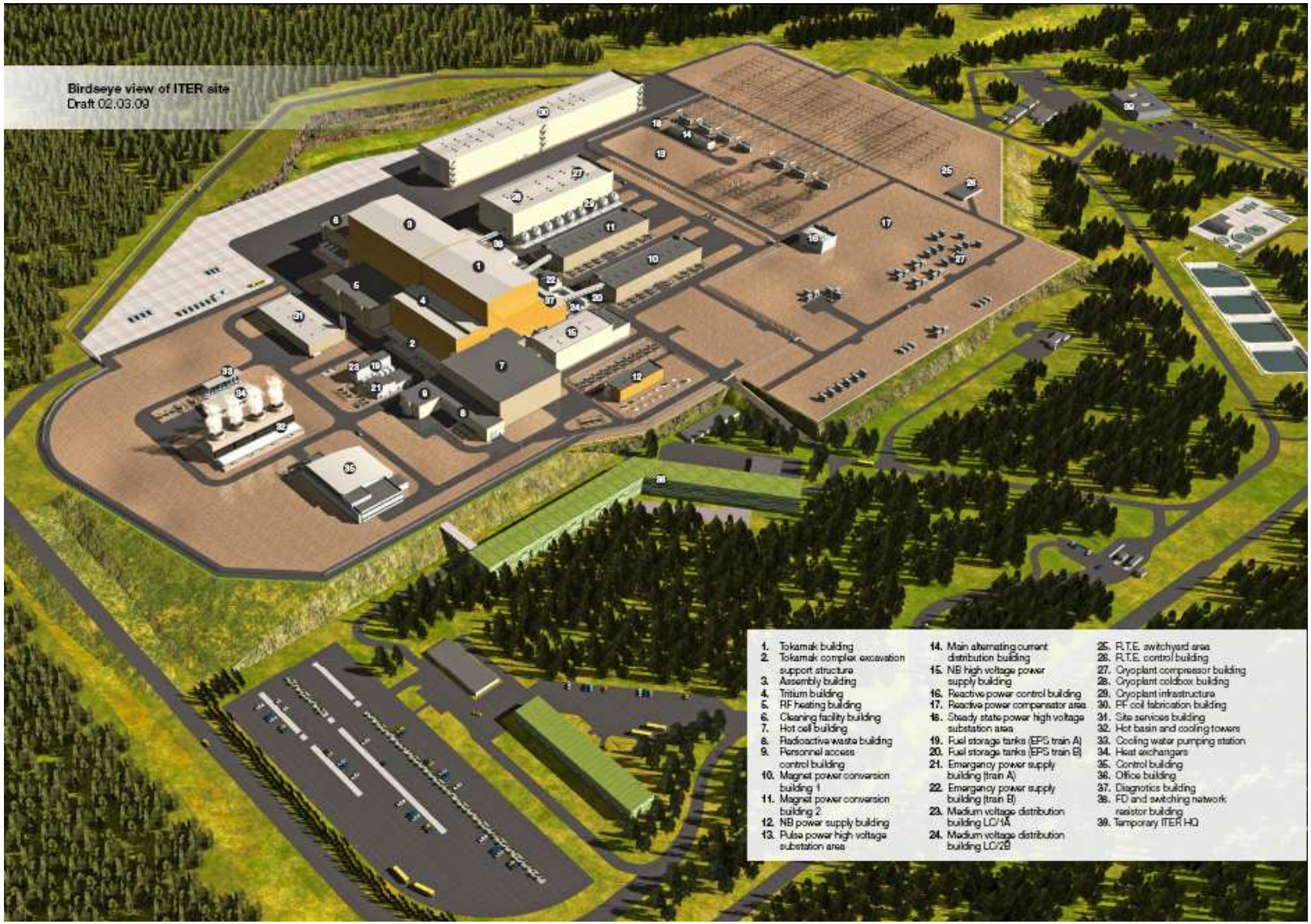

Main duties

- Basic:
  - Cool-down of the cryostat and torus cryopumps
  - Gradual cool-down and filling of the magnet system and the 80 K thermal shield in about one month
  - Cool-down of the NB cryopumps, pellet units and gyrotrons
  - Maintain magnets and cryopumps at nominal temperatures over a wide range of operating modes with pulsed heat loads due to nuclear heating and magnetic field variations
  - Accommodate periodic regeneration of cryopumps
  - Accommodate resistive transitions and fast discharges of the magnets and recover from them in few days
- Additional
  - Ensure high flexibility and reliability
  - Low maintenance

Cryogenic capacity & loads

- LHe cryoplant: 65 kW equivalent @ 4.5 K
  - Cooling of the superconducting magnet system, HTS current leads
  - Cooling of cryo-pumps with high regeneration frequency and small users
- LN2 cryoplant: 1300 kW @ 80 K
  - Thermal shielding, LHe cryoplant pre-cooling
- Helium inventory: 24 t

Type of load	Temperature level	Averaged value
Nuclear heating	4.2 K	3.2 kW
Variable heat load (AC losses & Eddy currents)	4.2 K	16.4 kW
Static heat loads	4.2 K	8.1 kW
SHe circulating pumps and cold compressors	4.2 K	11.4 kW
Cryopumps system and small users	4.5 K	6.5 kW + 0.07 kg/s
HTS current leads	50 K	0.15 kg/s
LHe plant precoolers	80 K	500 kW
Thermal shields and cryopumps baffles	80 K	800 kW (Baking)

Operation scenarios

- Cooldown in one month
- Uninterrupted operation in order to maximize machine availability
  - The Tokamak will be operated during two 8-hour shifts
  - The third shift will be used **to recover nominal cryogenic conditions**, for short interventions and to regenerate the cryopumps up to 470 K
- The large dynamic loads prevent full redundancy but allow continuous and uninterrupted operation without plasma
- Short maintenance periods of few days every two weeks
- Major shutdowns every 16 months
- RAMI analysis to improve the design and requirements for spares

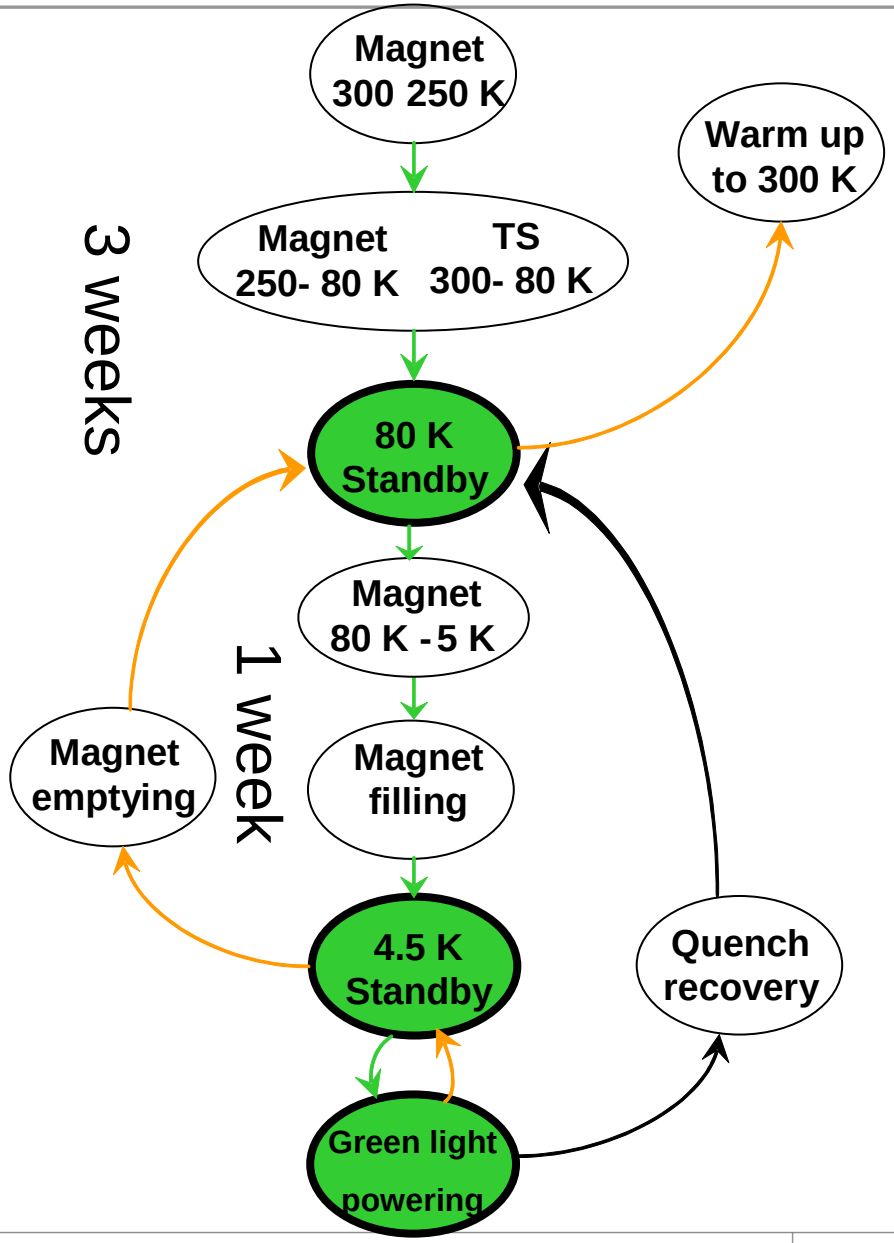

Main cryogenic sub-systems

The ITER cryogenic system consists of two main sub-systems:

Cryoplant:

the LHe (JF) and the LN2 plants combined with the 80 K helium loop (EU)

Cryo Distribution, Cold Termination and Valve Boxes:

Main Cryo Distribution Boxes with helium circulating pumps for cooling of magnets and cryopumps (IN)

System of cryogenic transfer lines (IN) located inside the Tokamak building, between the Tokamak and Cryoplant buildings and inside the cryoplant building

Cold Termination Boxes (CN) for the Magnets

Cold Valve Boxes to feed the (EU) Cryopumps and (KO) Thermal Shields

Cold Valve Box (US) for the Pellet Injection System

Cryoplant architecture

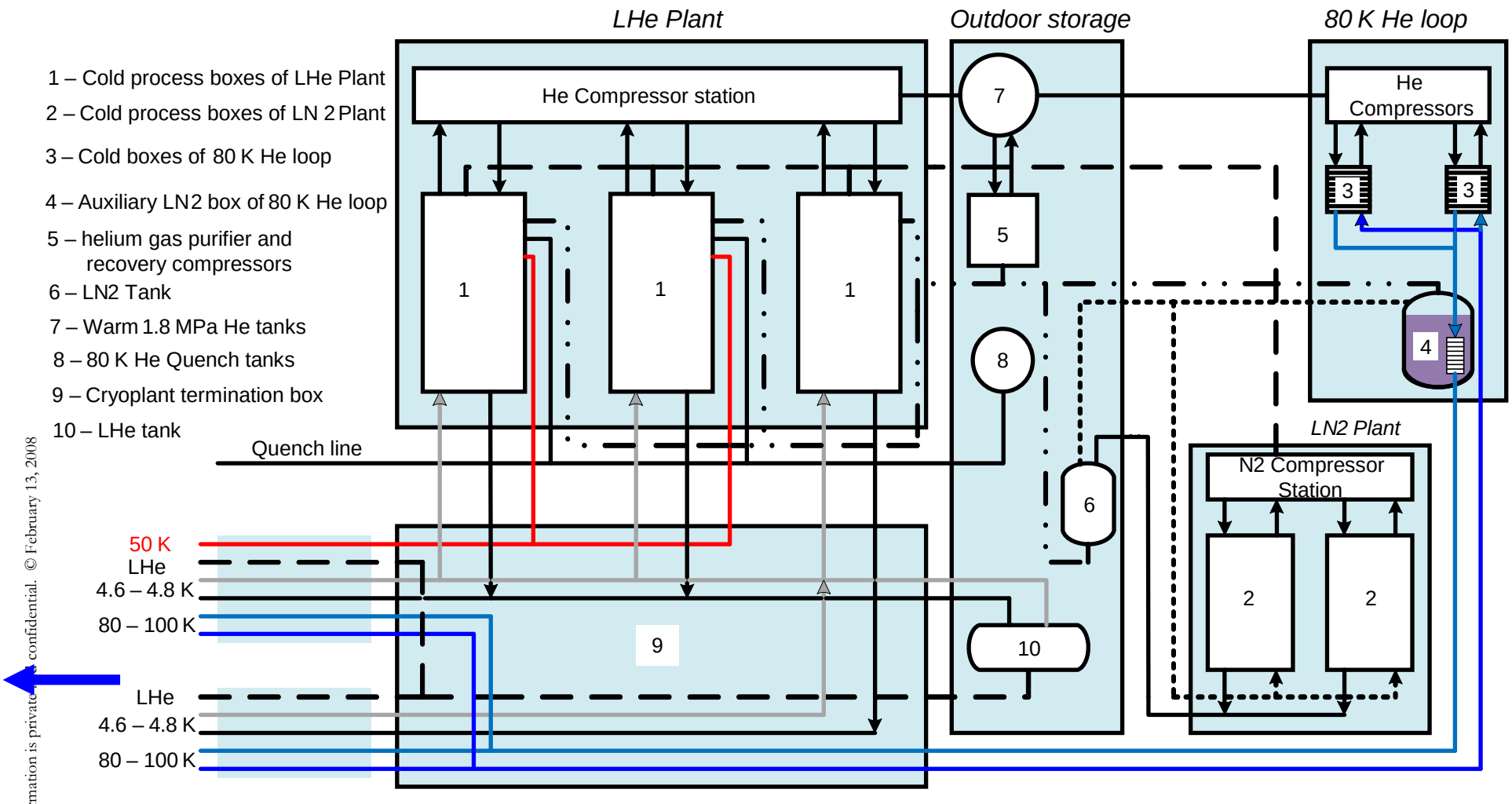

Cryodistribution architecture

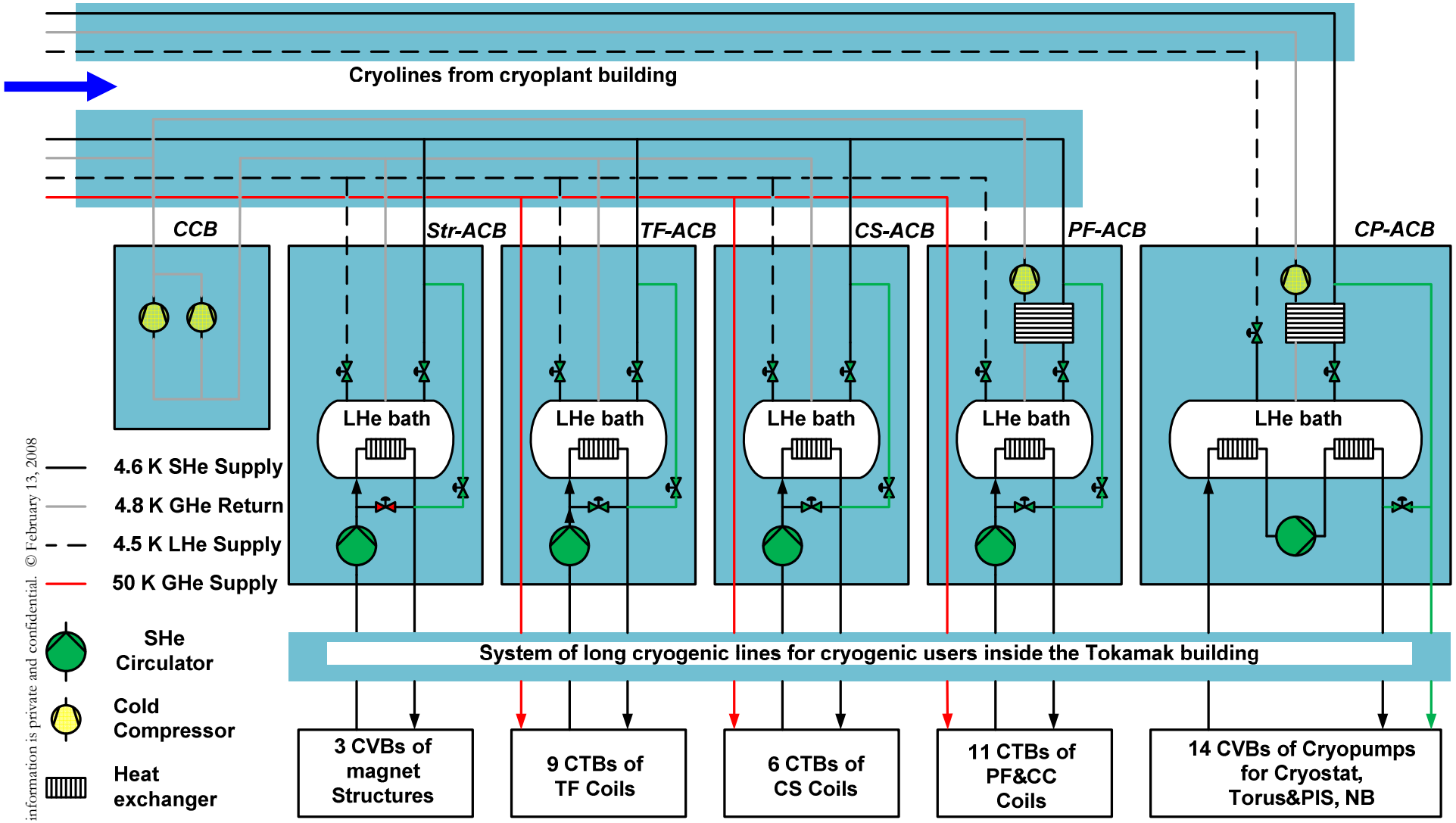

Coping with large pulsed heat loads

Without active control of the cooling loop

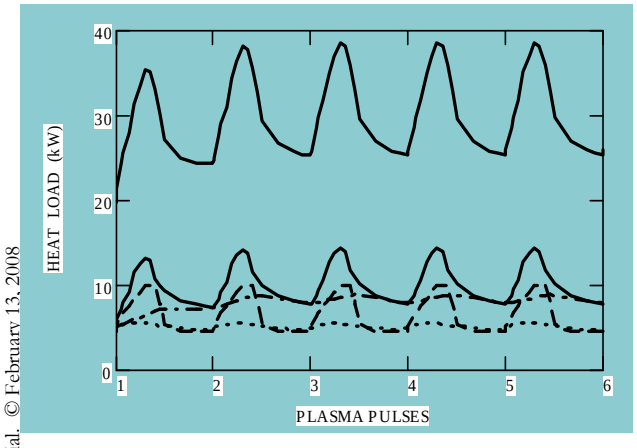

~ 6000 t of Structures

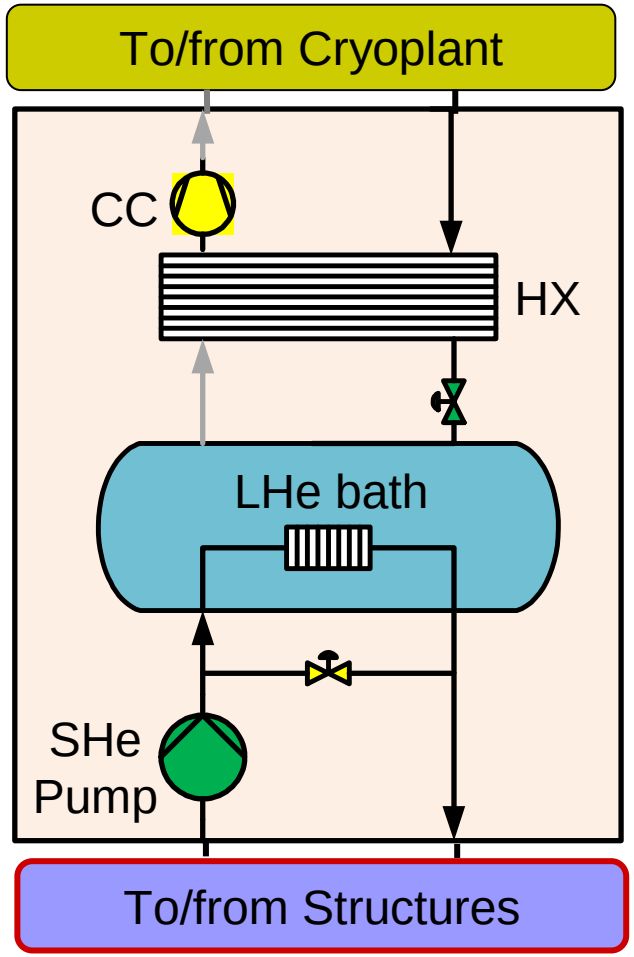

With active control of the cooling loop

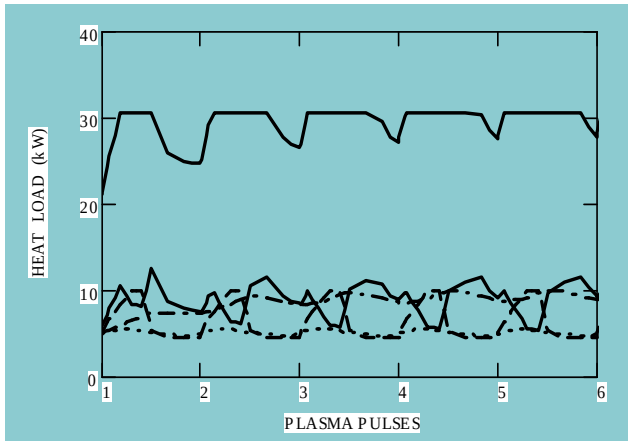

used as thermal damper

Layout of cryo distribution boxes and cryolines inside Tokamak building

>50 Cold Boxes, 3 km of cryolines, 4500 components

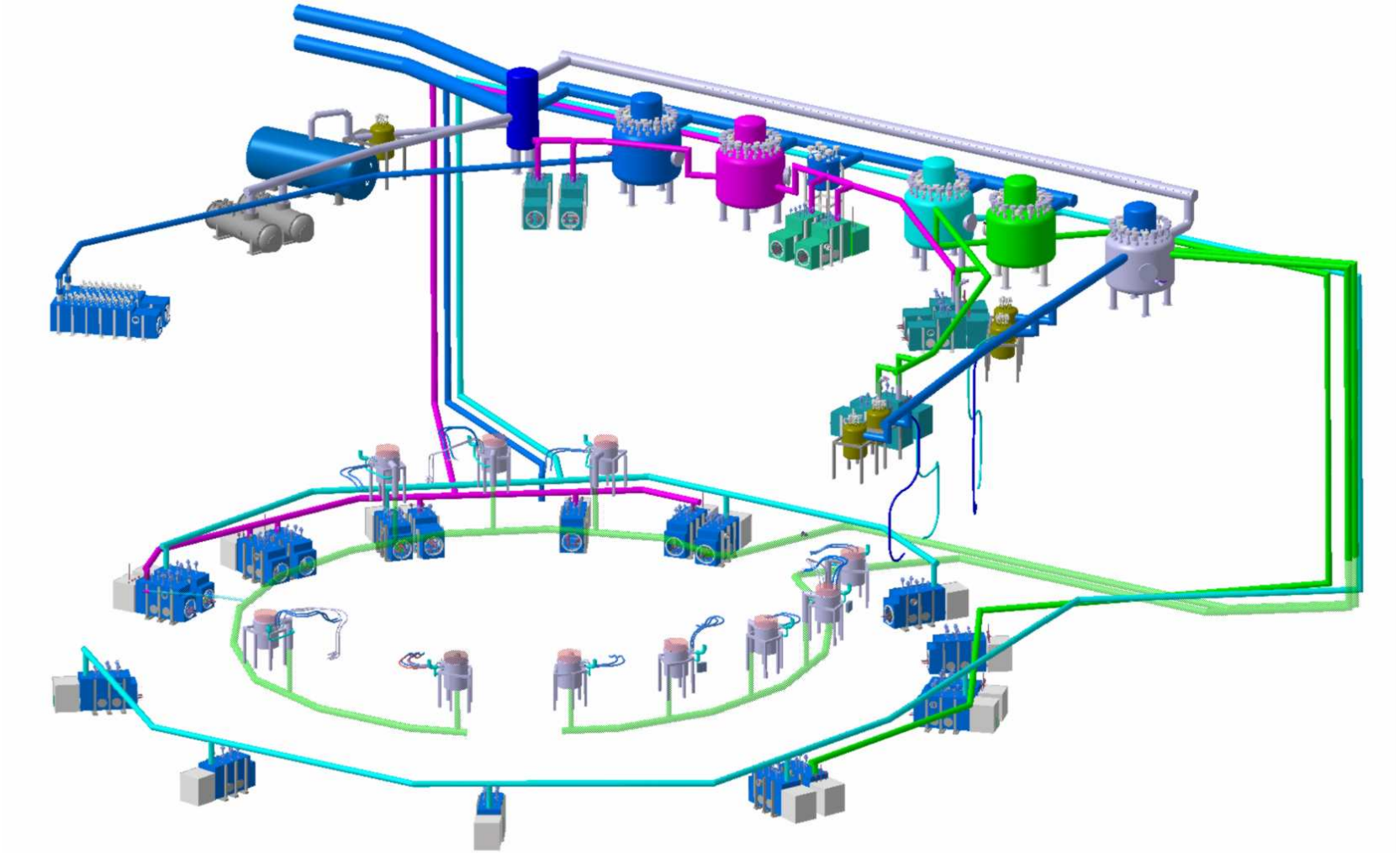

Cryoline in the low pipe chase

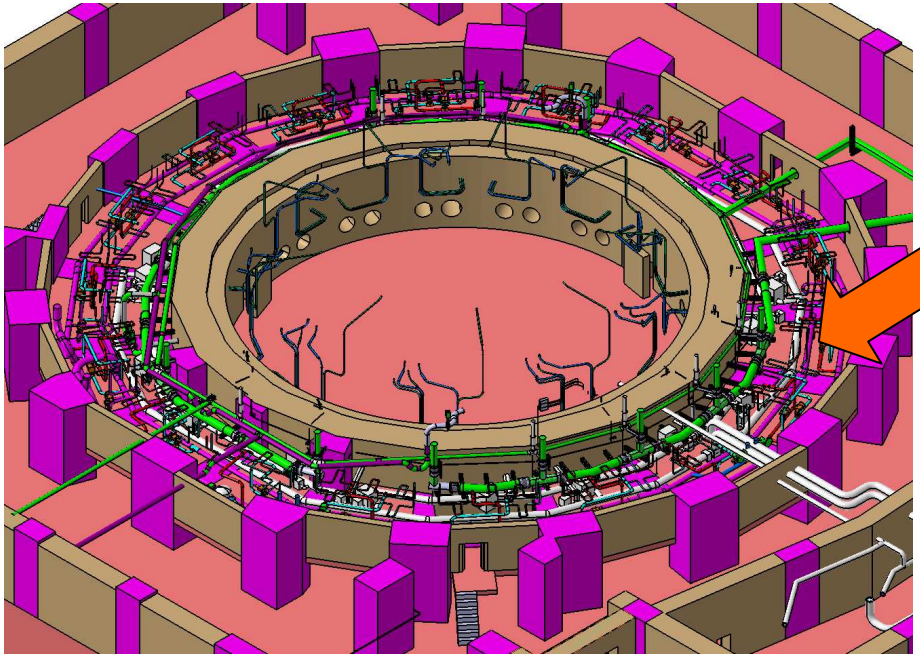

Low pipe chase

Complex layout and maintainability

Cryoline

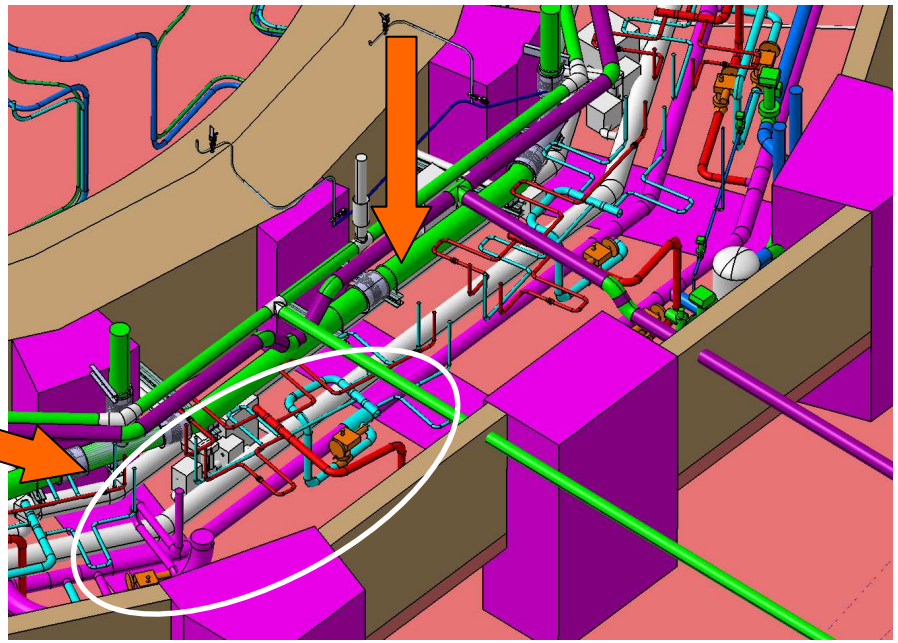

Water cooling modules

Auxiliary Cold Boxes

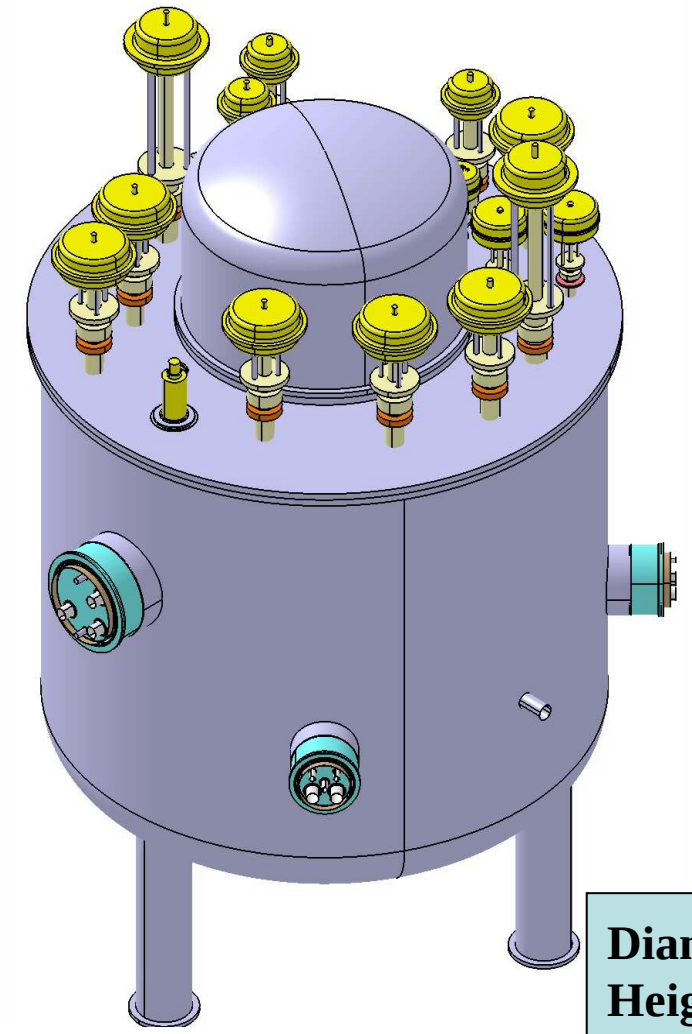

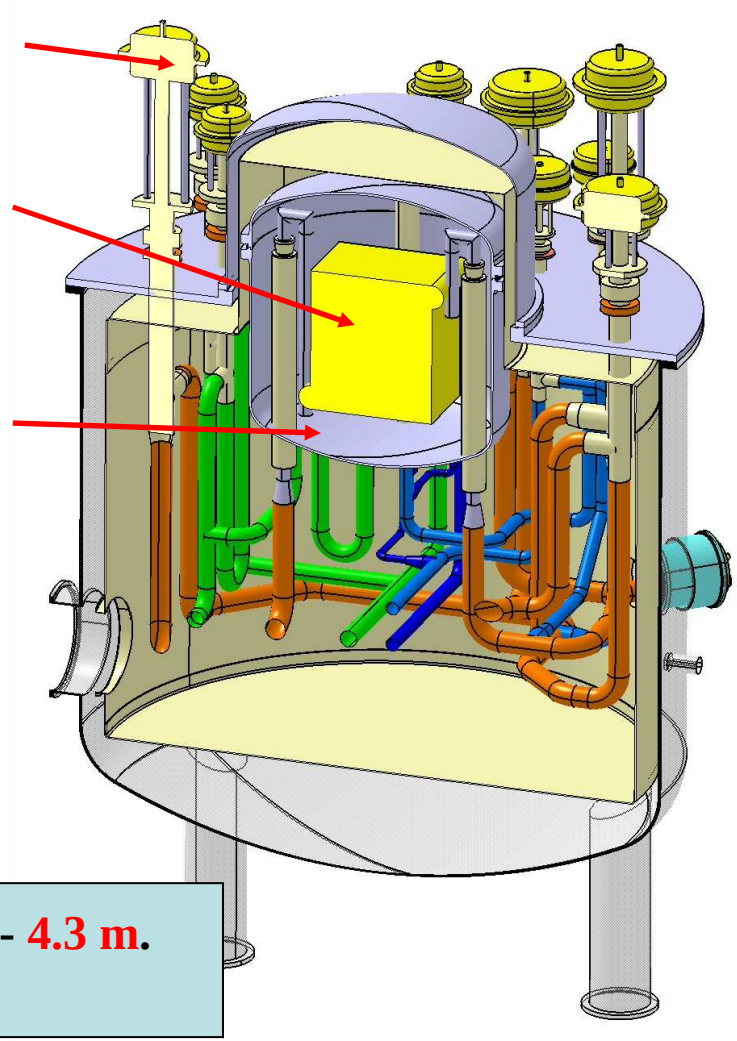

Diameter of ACB - 4.3 m.
Height ~ 6 m.

Key technological components

- Key cryodistribution components such as
  - Cold circulators
  - Cold compressors
- Cryoplant pulse mode operation with unprecedented load variation (cryogenic system are usually operated in quasi-steady state)

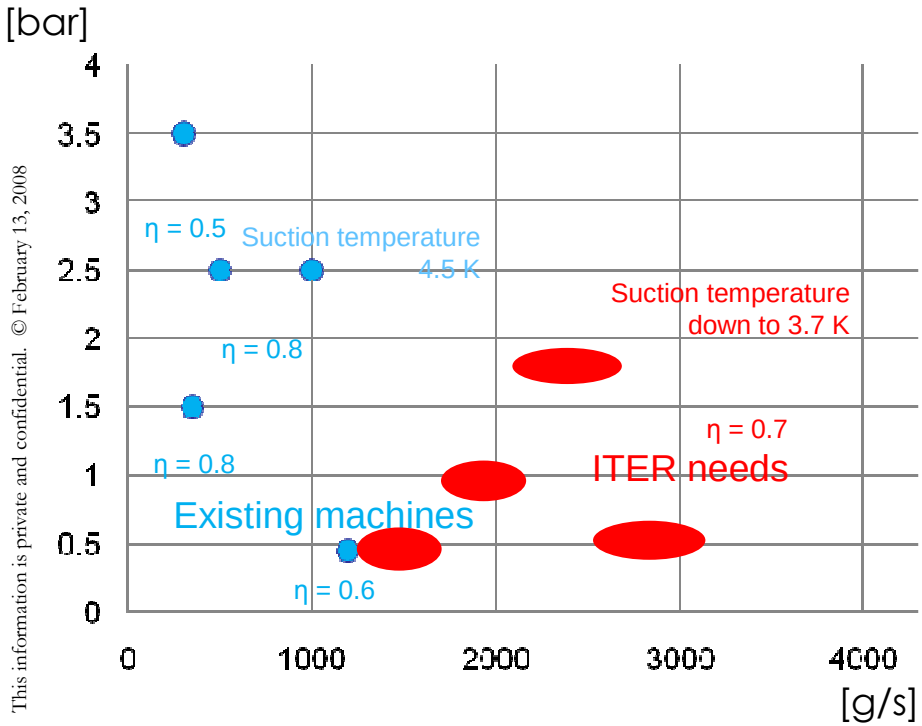

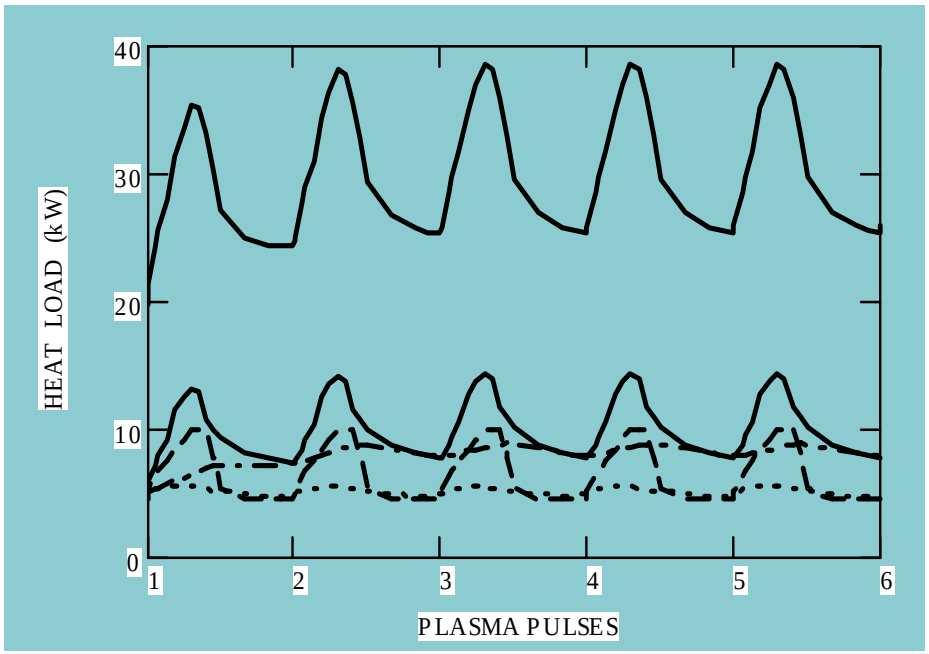

Layout of the Cold Termination Boxes for magnets

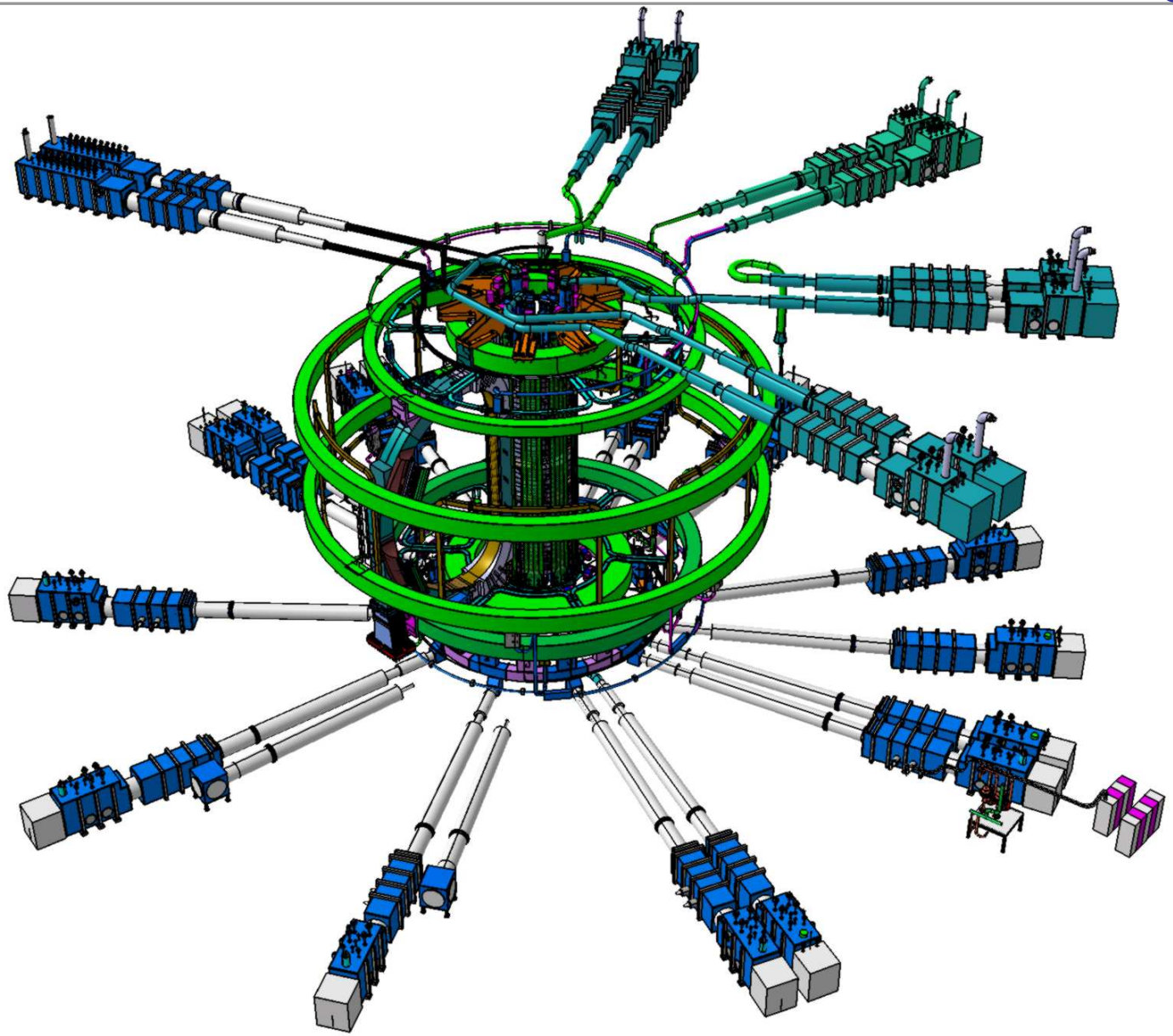

The components of a magnet cold termination box

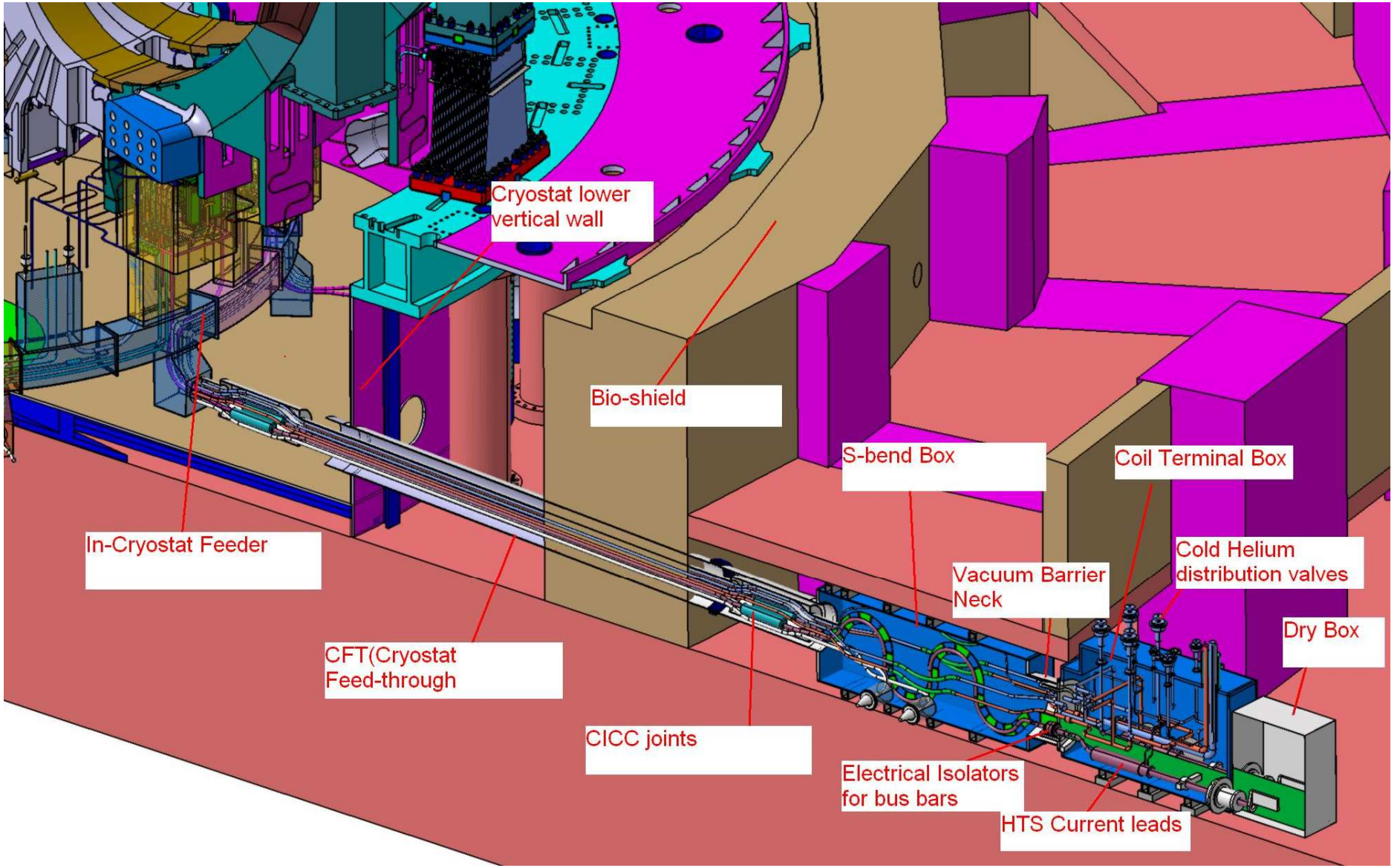

Cryopumps cryodistribution system

- 1 Auxiliary Cold Box (ACB)
- 3 Cryolines
- 14 Cold Valves Boxes (CVBs)
- 36 Cryopumps cryojumpers
- 3 PIS cryojumpers
- 8 Torus Cryopumps
- 2 Cryostat Cryopumps
- 4 Neutral Beam Cryopumps
- 3 Pellet Injectors System (PIS)
- 470 K box
- Cryogenic Guard Vacuum System (CGVS)

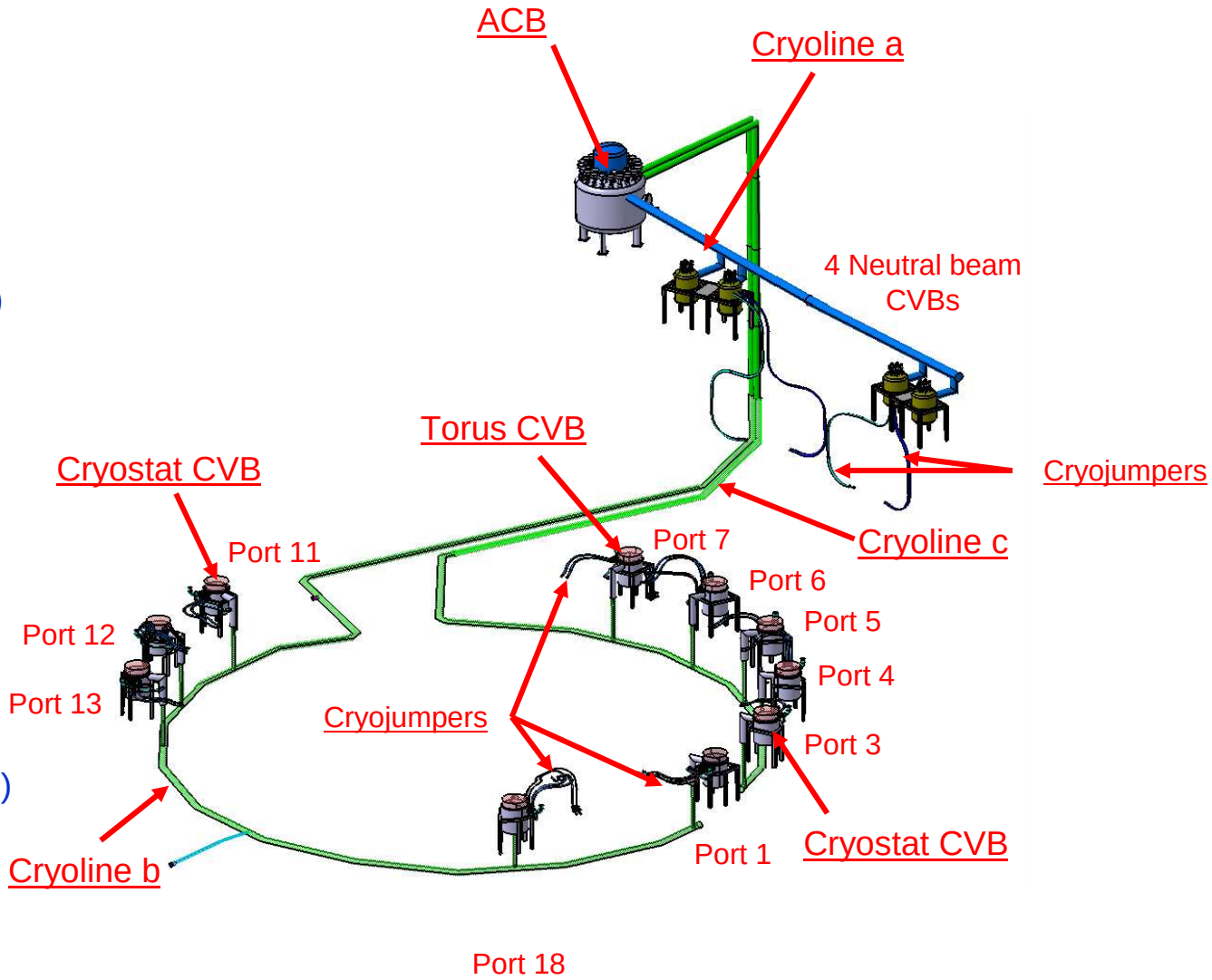

Torus cryo-pumping

~100 m^3s^{-1} pumping speed

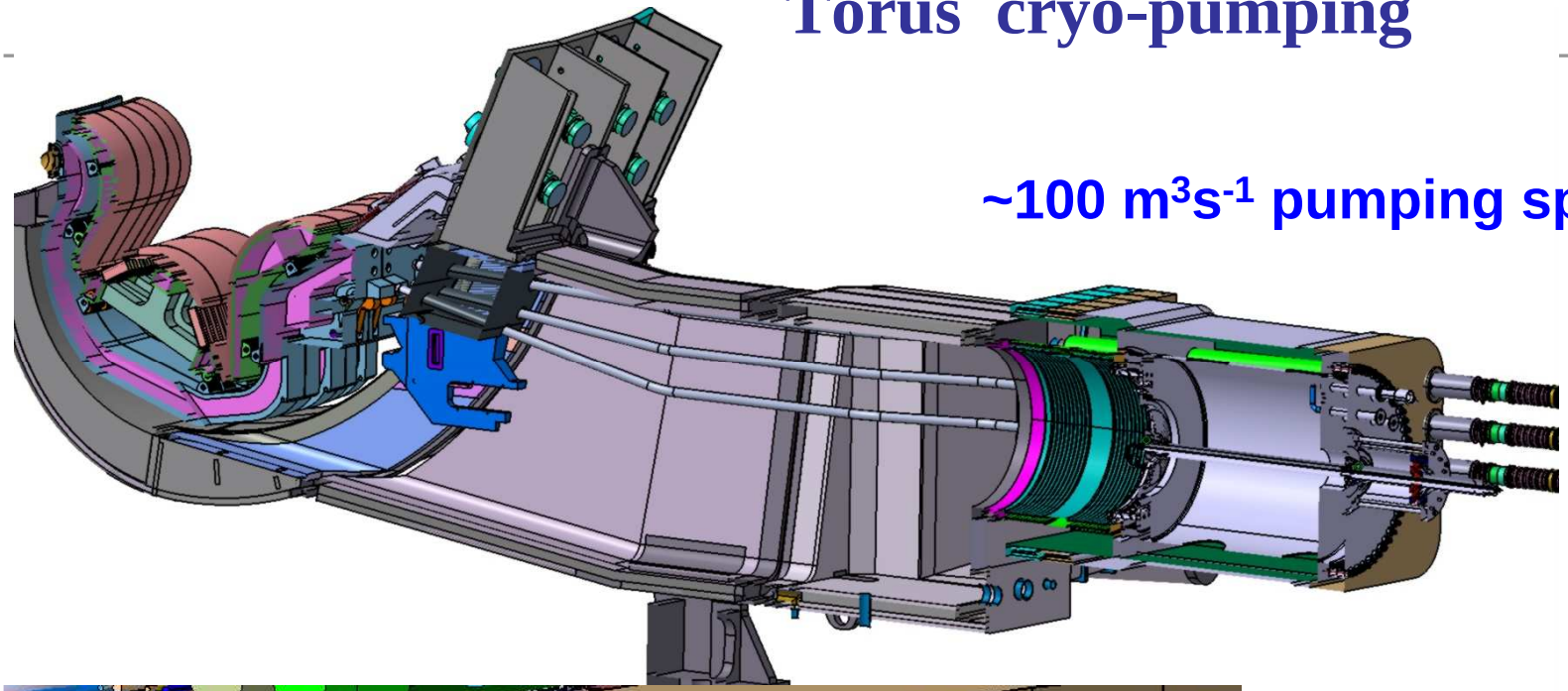

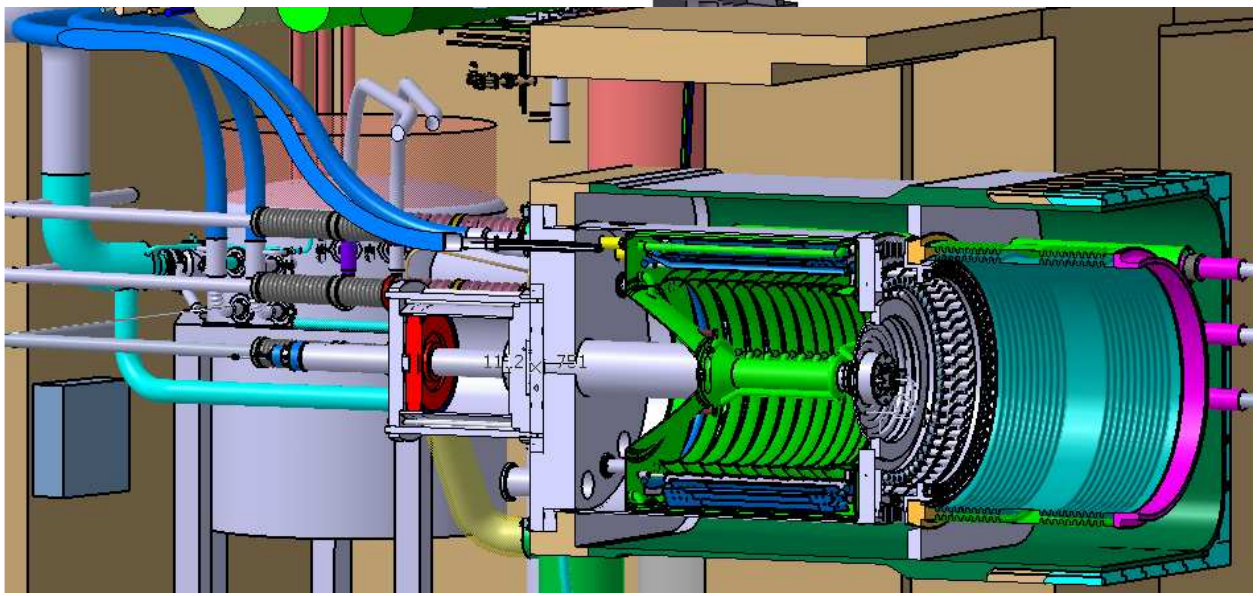

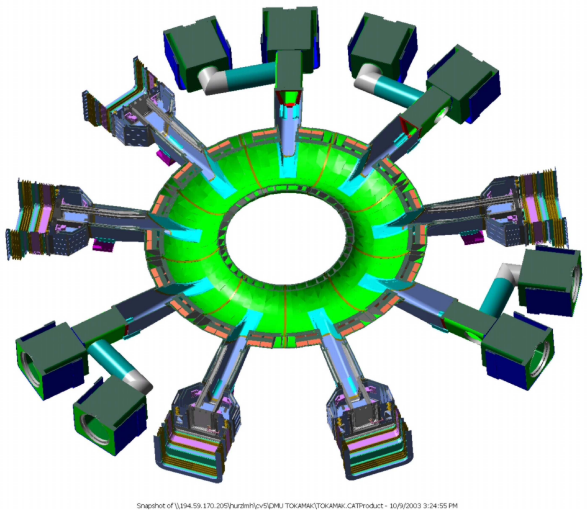

Cryopump arrangement in the cryostat

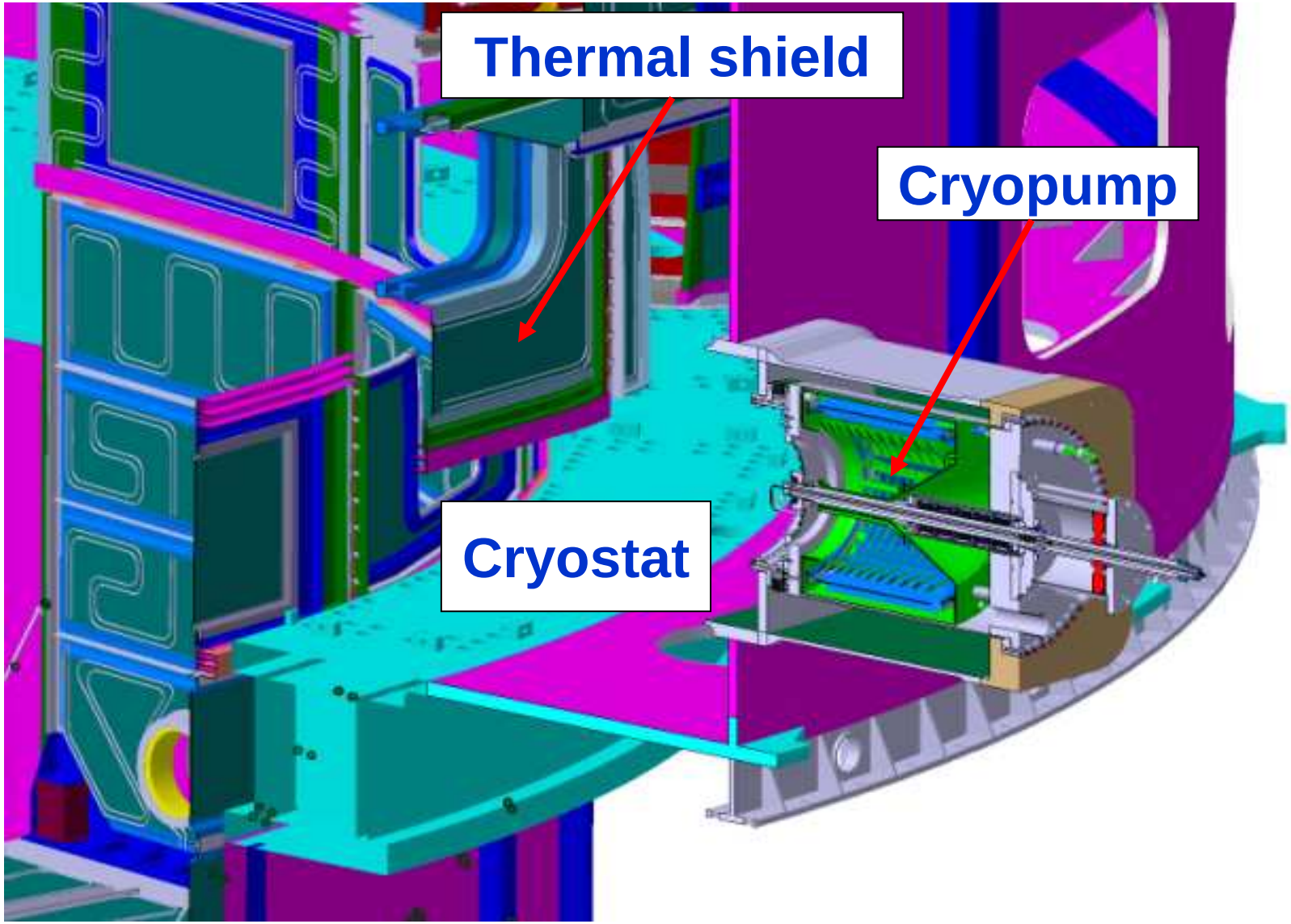

Thermal Shield Cooling System (TSCS)

Provide full redundancy of the system (2004, DDD)

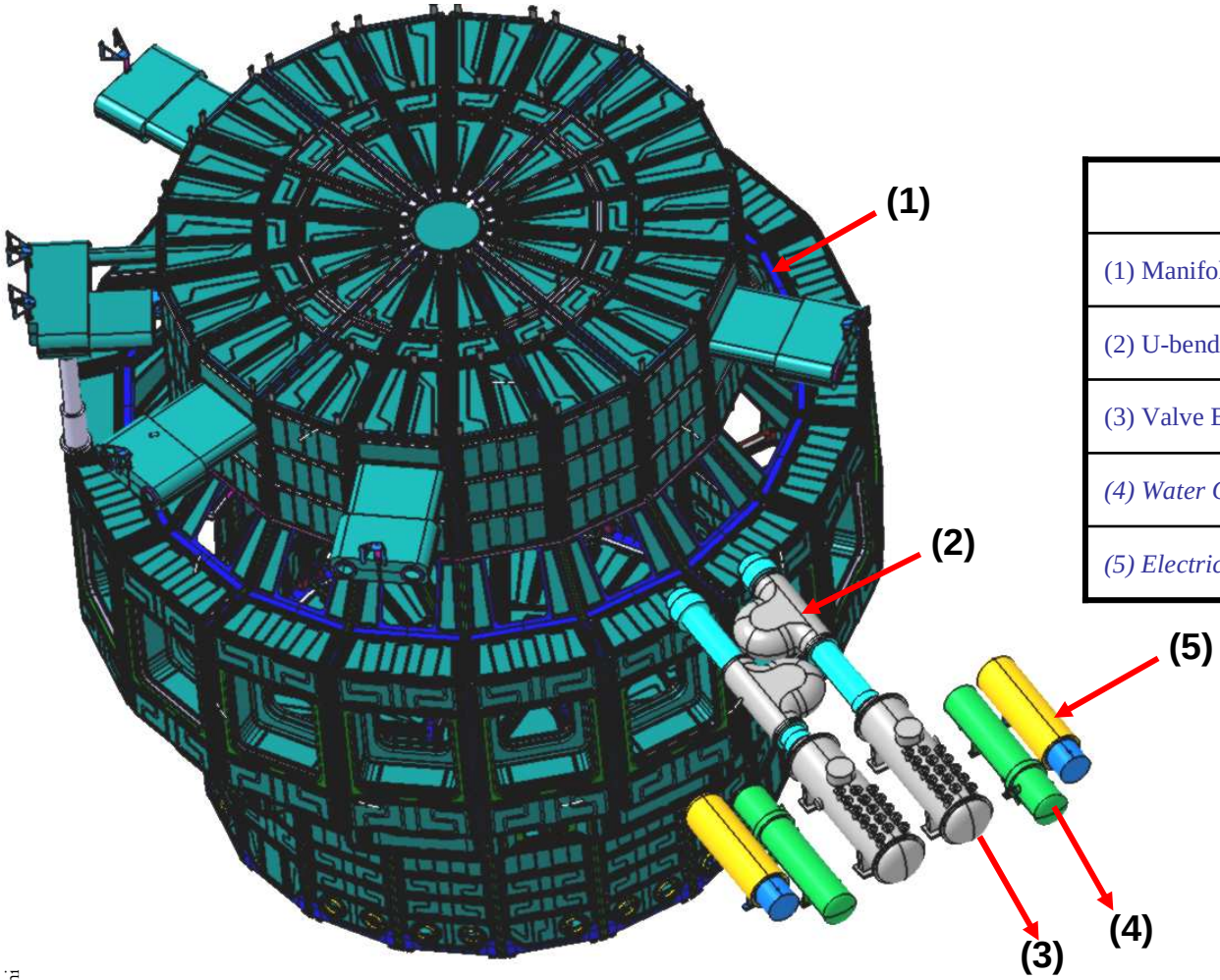

Sub-system	Quantity
(1) Manifold/Supply Line	Set
(2) U-bend Box	2
(3) Valve Box	2
(4) Water Cooler	2
(5) Electrical Heater	2

Thi

Technological challenges and variants under study

- Analysis of technical variants compatible with the requirements and basic design principles are presently under study
  - Simplification of the layout and improvement of performances, reliability and availability or reduction of investment and operation costs
  - Review and update of heat loads
  - Lowering of operating temperature to accommodate conductors and physics requirements

a) Large dynamic loads handling
   - ✓ Pulse mitigation by temporary by-pass of the structure load
   - ✓ Speed control of the cold circulators and temperature adaptation to load requirements
   - ✓ Use of liquid helium storage buffering and complex process control
   - ✓ Independent temperature control and subcooling capabilities

b) Helium management and cold quench tank temperature level

c) Optimal size, number of cold boxes and parallel operation (flow sharing)

d) Thermodynamic cycle optimization for the refrigerators

e) Developments of technology and engineering solutions for key components (e.g. SHe circulating pumps and heat exchangers)

f) Tritium containment and control

Cryogenics planning

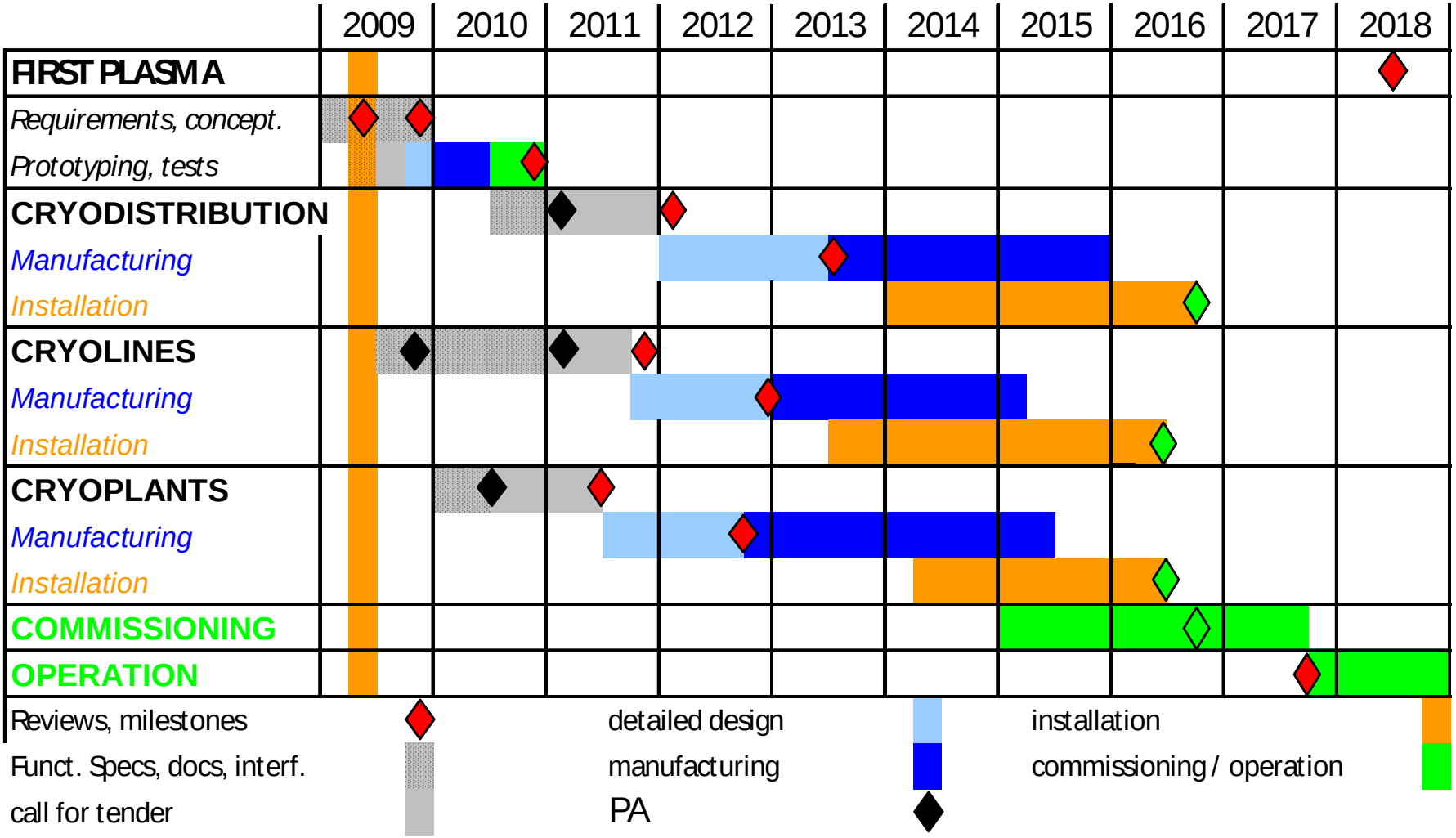

Conclusions

- ITER is a tremendous technical, managerial and scientific adventure exploring and pushing forward the frontiers of our knowledge.
- The ITER cryogenic system is one of the key component of the future machine
- It will be the second largest cryogenic system in the world with an installed cooling power of 65 kW at 4.5 K and 1300 kW at 80 K
- The cryogenic system is a technological but also an industrial challenge to develop efficient and industrially available components for future reactors
- Successful collaboration among ITER Organization, the Domestic Agencies and industry will be a key element for the successful completion of the project

iter

china eu india japan korea russia usa