ITER Divertor:

Requirements, Design and EU R&D

Bruno Riccardi

(Fusion for Energy-Barcelona)

Cadarache, 11 June 2008

Outline

- Requirements
- Design
- R&D results
- Procurement
- Conclusions

Requirements

Main Function of the Divertor

The main function of the divertor system is to exhaust:

-the major part of the alpha particle **power**

- helium and impurities from the plasma

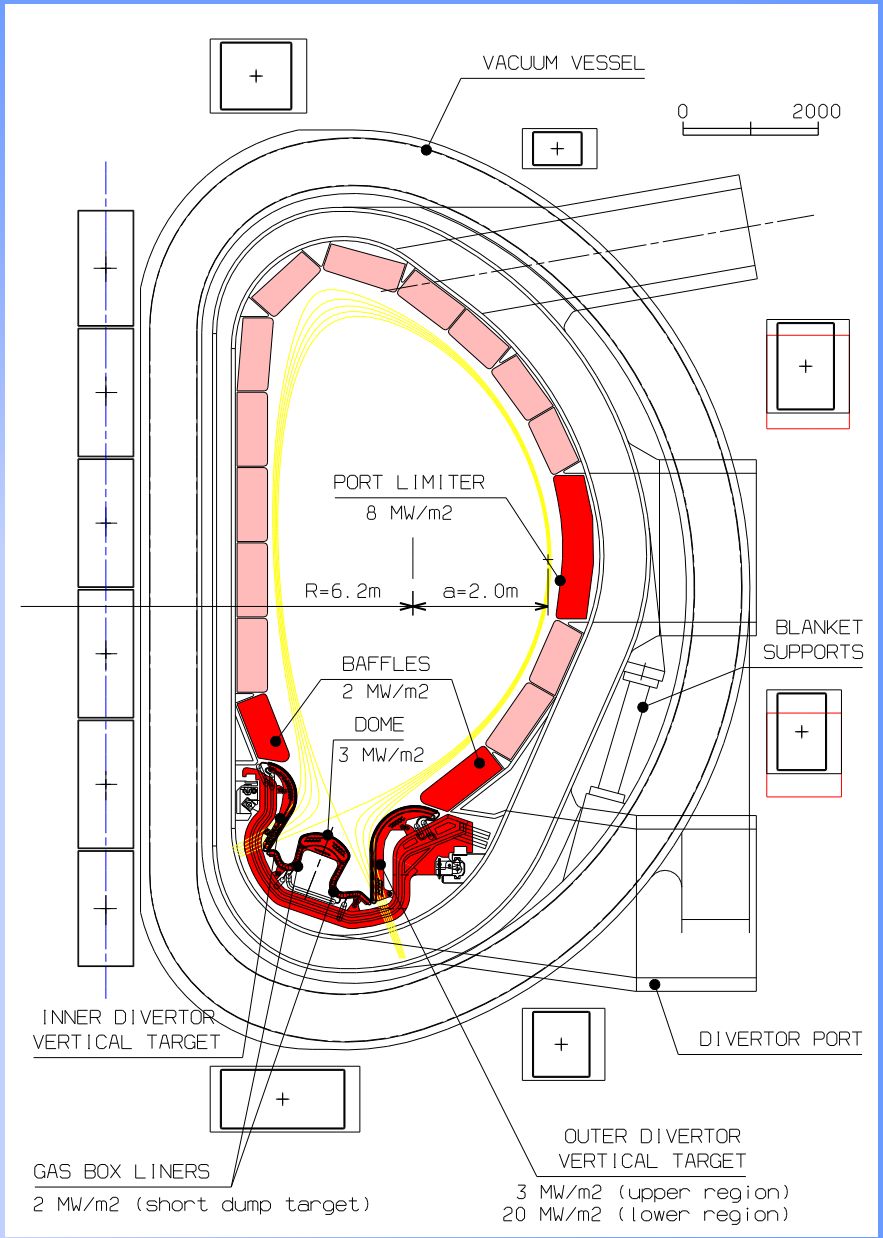

ITER Divertor

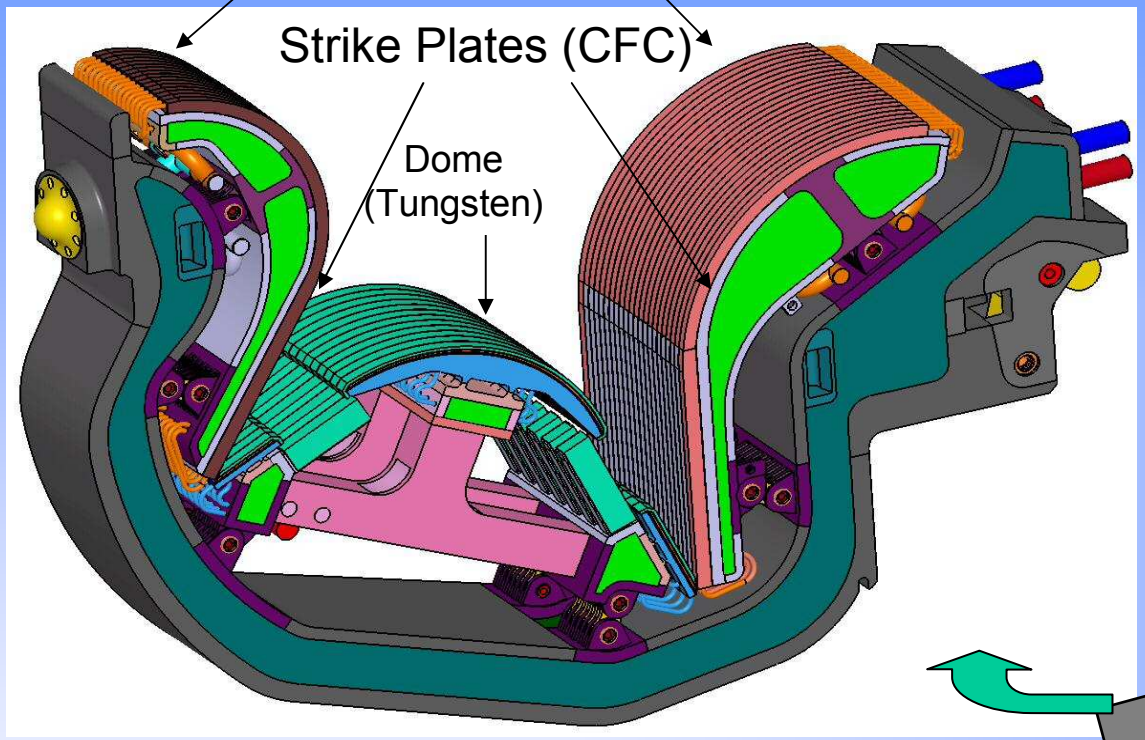

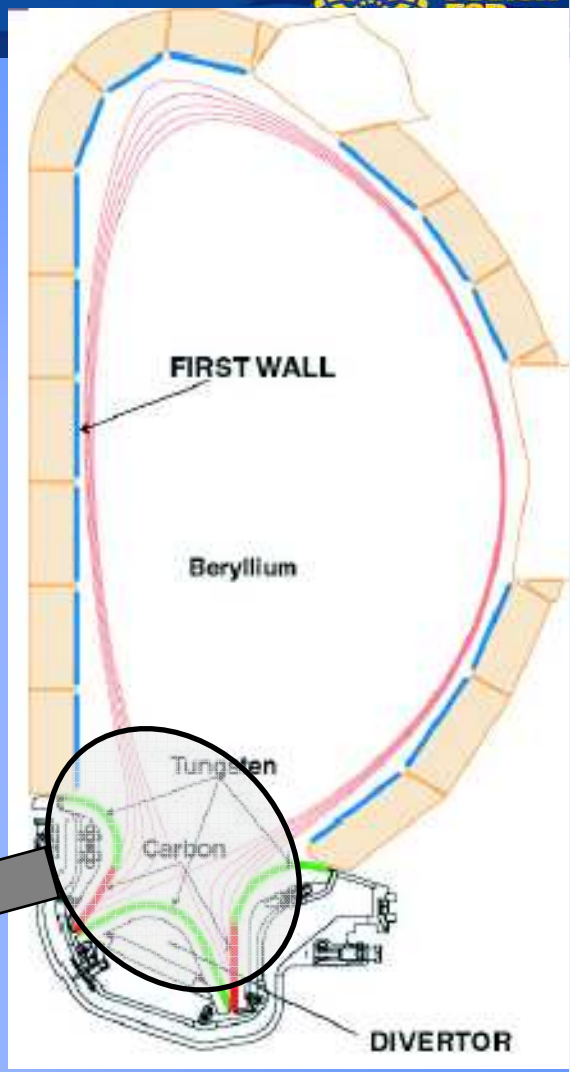

Design parameters

Total power 150 MW

Surface heat flux (MW/m²)

Steady state (400s,3000 cycles, CFC/W: 10/ 5

Transient (10 s, 300 cycles) : 20

Neutron volumetric heating : max 10 MW/m3

Neutron damage: 0.2-0.3 dpa

Disruption heat loads: 10-100MJ/m2 x 0.1-10ms **x** 300 cycles

ELMs heat loads: 0.5-1.5 MJ/m2 – freq. 1 Hz

Thermal Design Loads (in MW/m^2)

	Operating regimes	
	Semi-detached plasma	Attached plasma
Inner vertical target (lower section)	10	20
Inner vertical target (upper section)	5	5
Inner neutral particle reflector plate	1	1
Outer vertical target (lower section)	10	20
Outer vertical target (upper section)	5	5
Outer neutral particle reflector plate	1	1
Hot liner	0.7	0.7
Dome	1	1

HIGH HEAT FLUX COMPONENTS	FOSSILE FIRED BOILER WALL (ABB)	FISSION REACTOR (PWR) CORE	ITER DIVERTOR
DESIGN	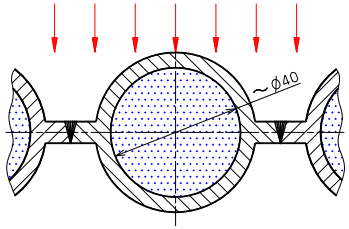	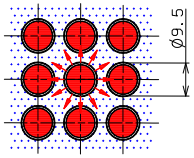	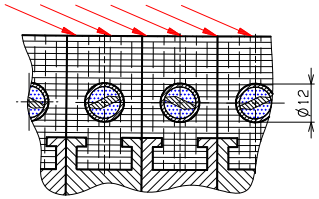
HEAT FLUX - average MW/m^2 - maximum MW/m^2	 0.2 0.3	 0.7 1.5	 3 – 5 10 – 20
Max heat load MJ/m^2 Lifetime years Nr. of full load cycles Neutron damage dpa Structure material	- 25 8000 - Ferritic-Martens. steel	- 4 10 10 Zircaloy - 4	10 3 3000 0.2 CuCrZr & CFC/W
Coolant - pressure MPa - temperature °C - velocity m/s - leak rate g/s	Water-Steam 28 280-600 3 <50	Water 15 285-325 5 <50(SG)	Water 4 100 – 150 9 – 11 <10^{-7}

Possible scenarios for divertor replacements
(DDD 2004)

Divertor set		1	2	3	4	5
Operation		H	D-D D-T	D-T	D-T	D-T
Strike point armour		CFC	CFC or W	W	W	W
Disruption Frequency	%	30	20	10	6	3
Lifetime	pulses	3000	3000	3000	8000	16000

Design

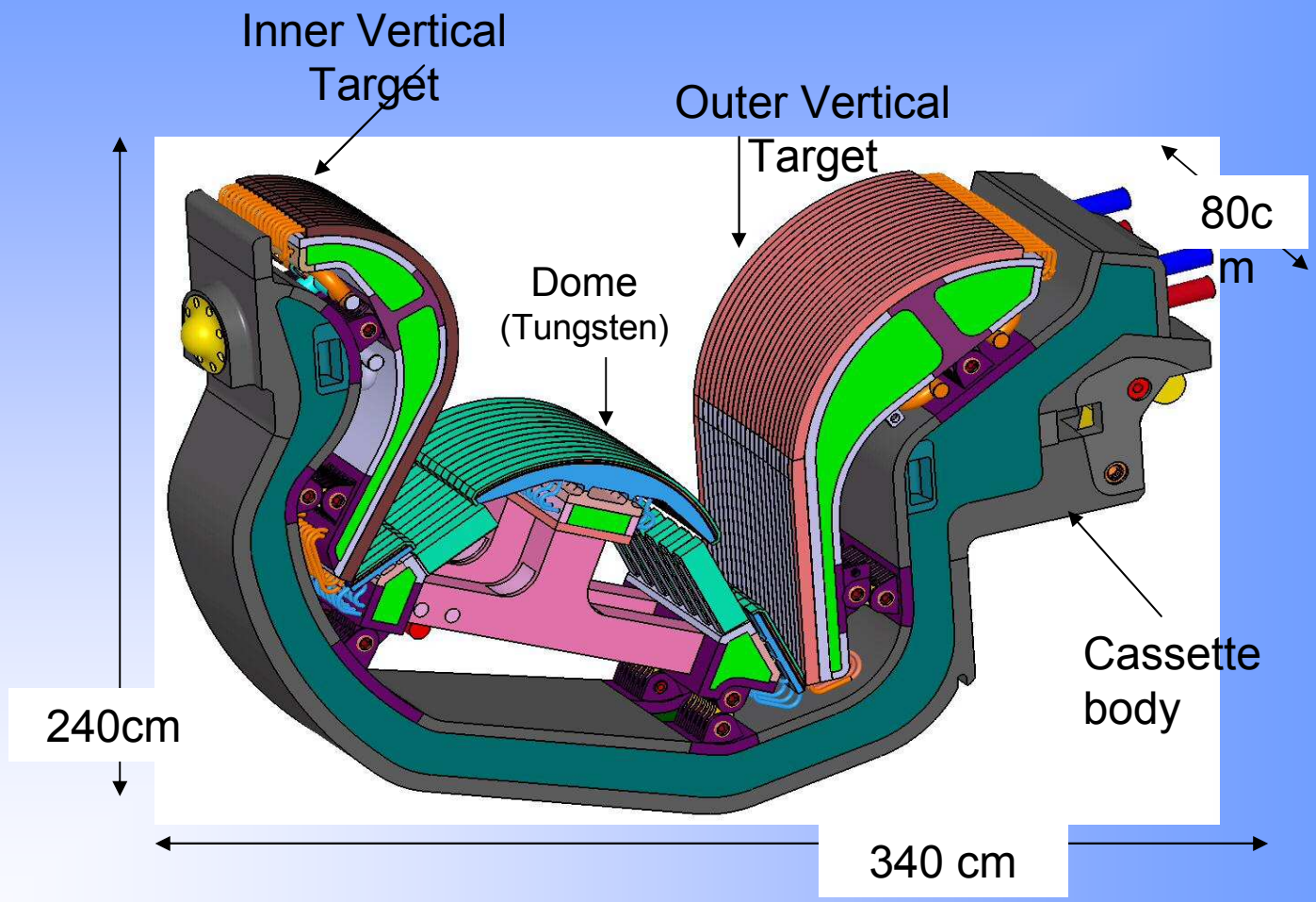

54 Cassettes each ≈ 8.3 tons

Divertor main features

General

54 Cassette Bodies, of which

- **6 diagnostic cassettes**
- **10 instrumented cassettes**

54 Outer Vertical Targets (2 halves)

54 Inner Vertical Targets (2 halves)

54 Dome/Liners

Cassette

- is reusable to minimise activated waste
- provides neutron shielding,
- routes the water coolant
- supports the different PFCs

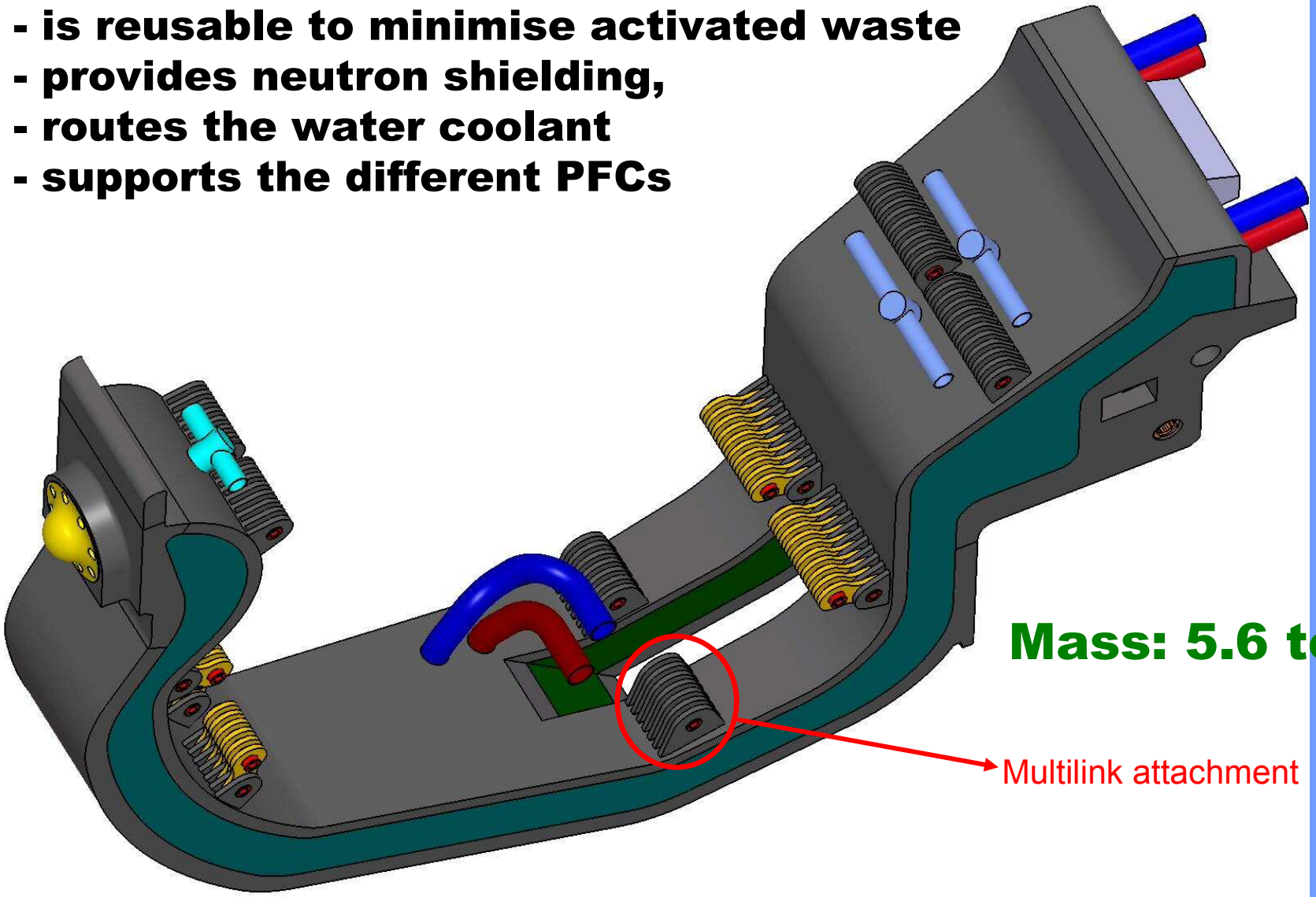

Mass: 5.6 ton

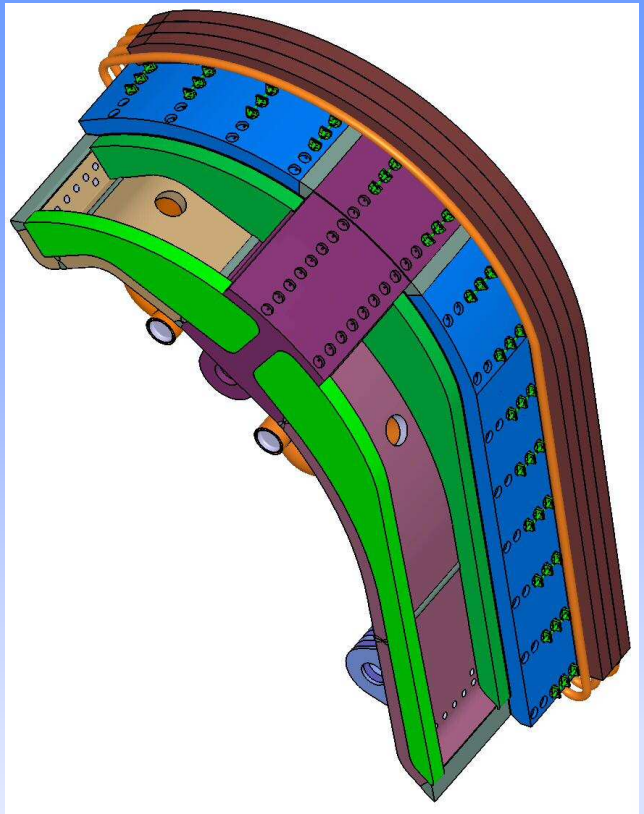

Inner Vertical Target
Mass: 0.66 ton

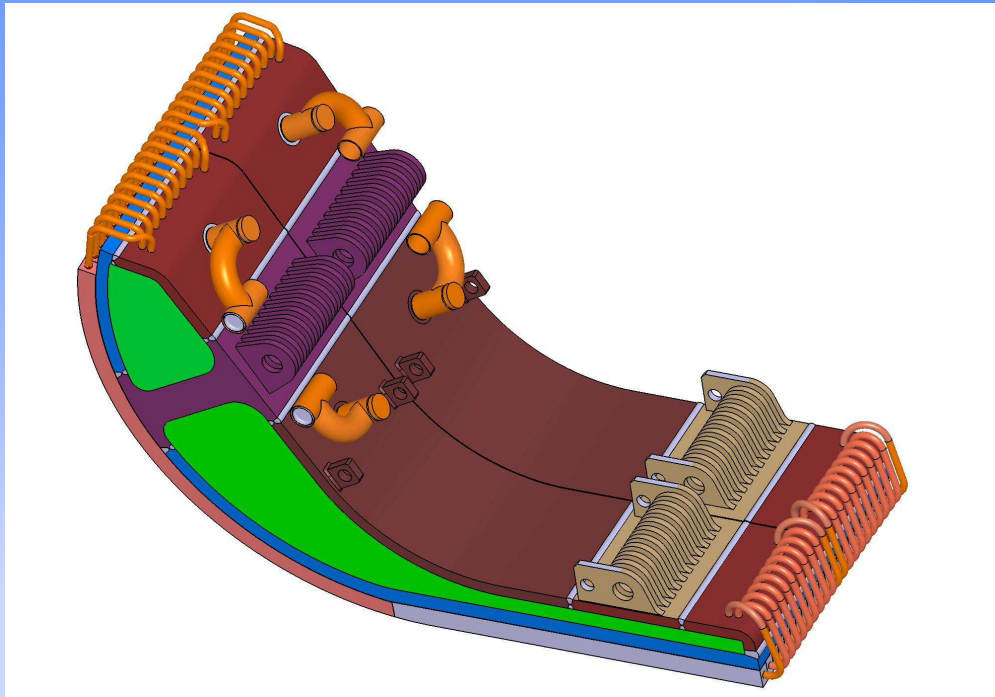

Outer Vertical Target
Mass: 1.1 ton

The inner and outer VT are the PFCs which in their lower part interact directly with the scrape-off layer plasma and in their upper part act as baffles for the neutrals

The **dome** sees mainly radiation and charge exchange neutrals . It also baffles neutral particles and protects the liner and the neutral particle reflector plates from the plasma

Mass: 0.9 ton

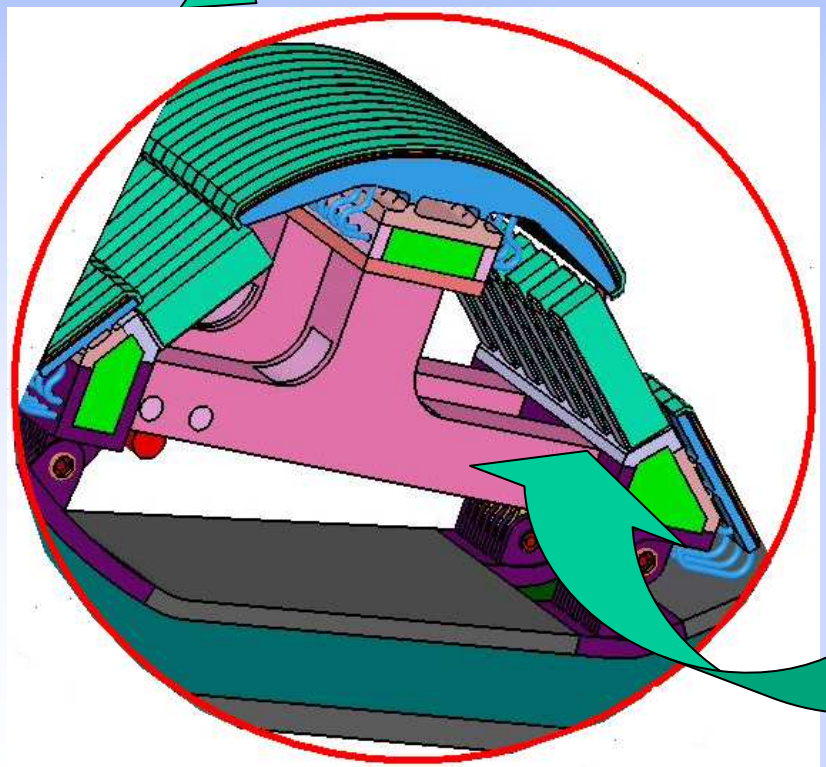

A **semi-transparent liner** that protects the cassette body from direct line-of-sight view of the plasma, while allowing He and other impurities to be pumped away

Pumping route

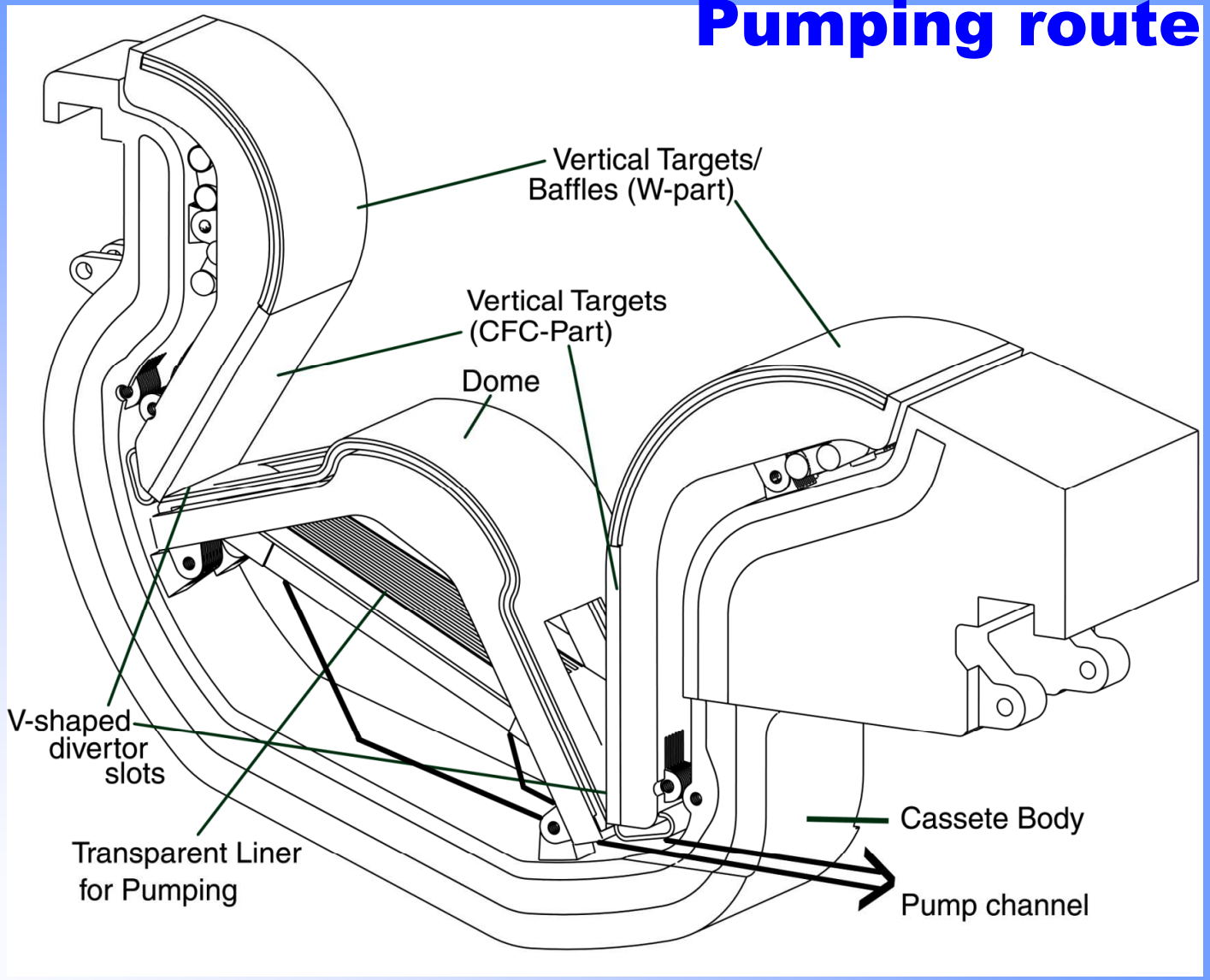

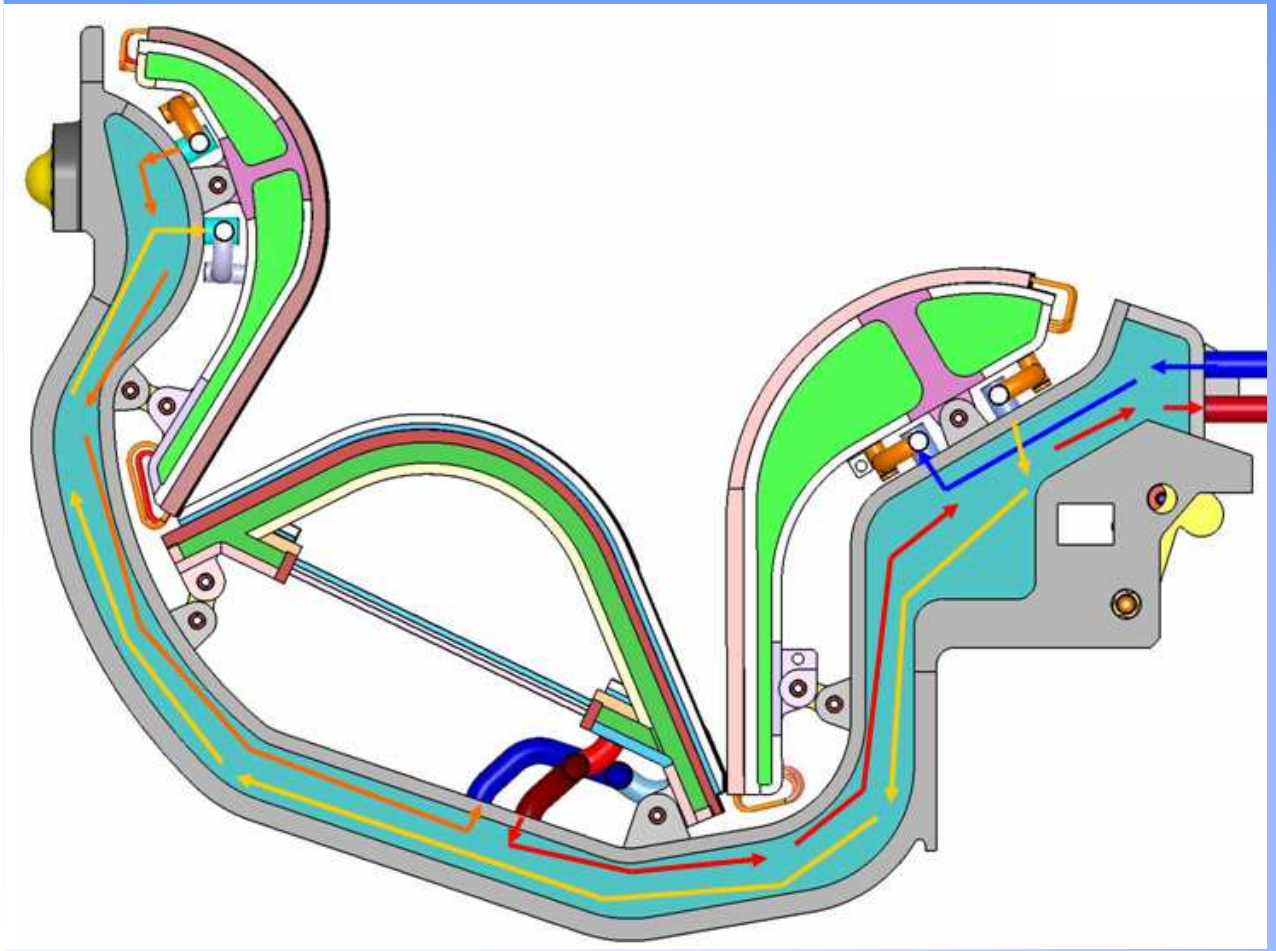

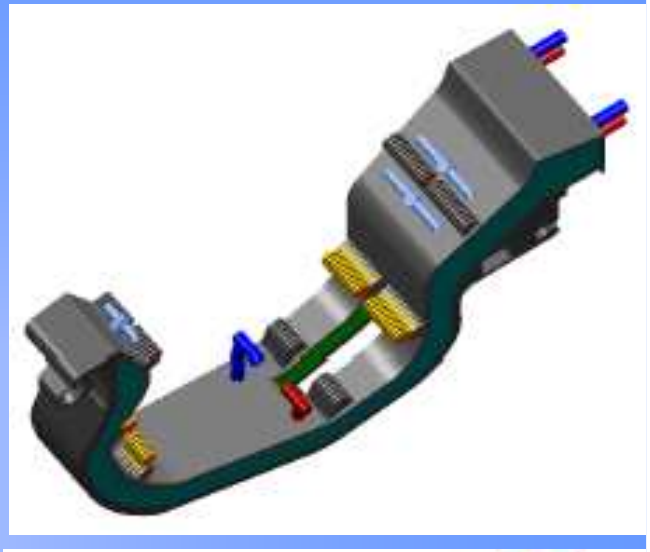

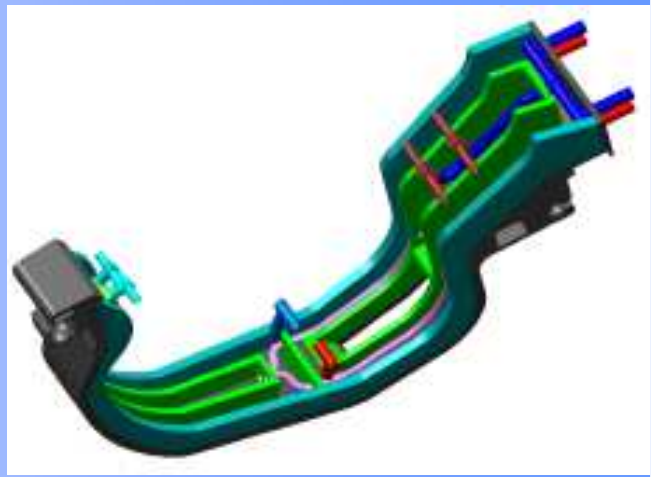

Divertor coolant route

Divertor coolant design parameters

Inlet temperature:		100 °C
Inlet water pressure:		4.3 MPa
Total pressure drop:	1.21	< 1.4 MPa
CHF margin:	1.57	> 1.4
Total flow rate:	934	< 1000 kg/s

Multilink attachments

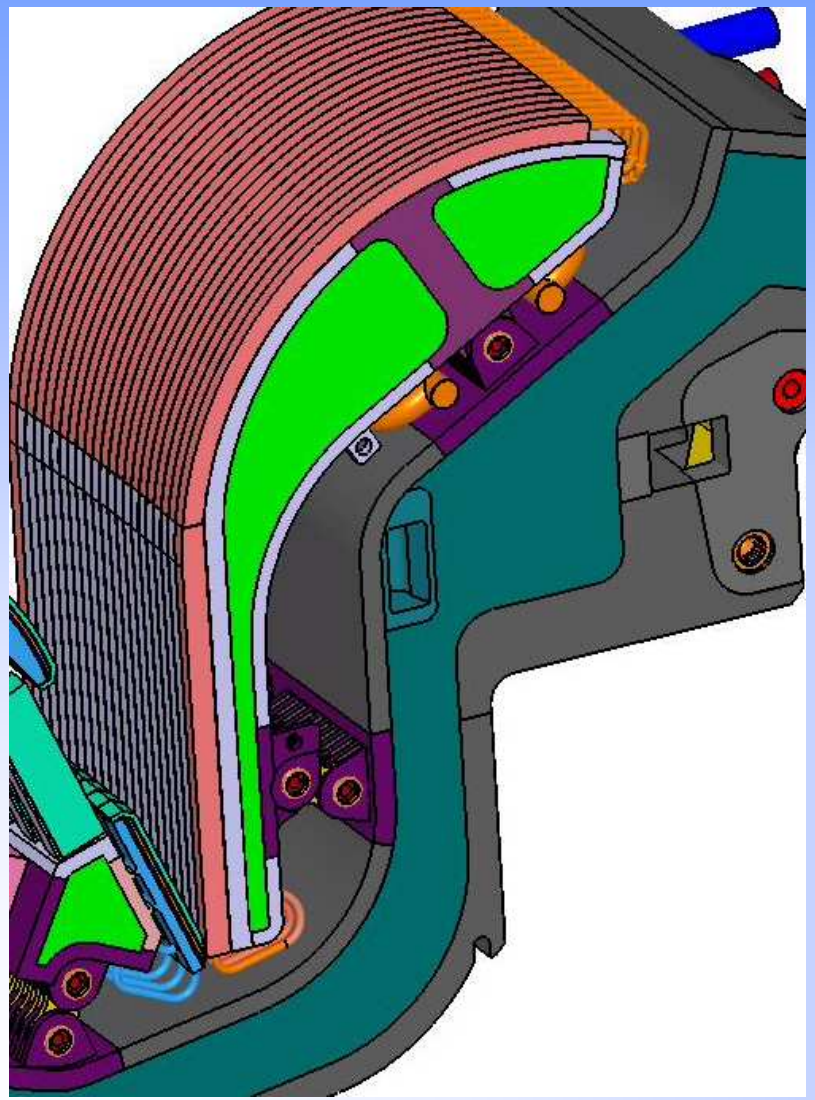

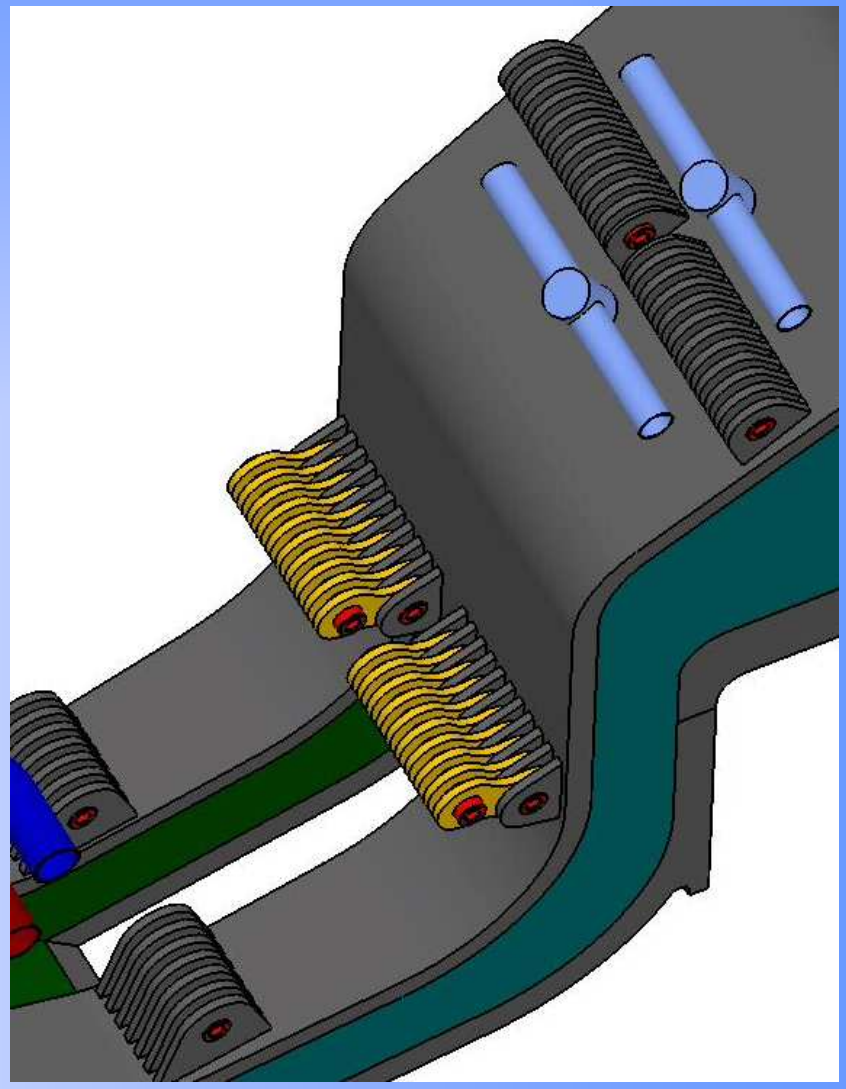

Multilink functions

Accurate Location of PFC.

Transmission of the EM loads on the PFC to the Cassette (11.6 t Cat 2; 15.5 t Cat 3 on a single link).

Accommodation of displacements associated with temperature differentials between the PFC and Cassette, and EM loading.

Table 1 – Main design features of the multilink attachments

Sleeve outer diameter	45 mm
Sleeve inner diameter	43 mm
Pin outer diameter	43 mm
Pin inner diameter	22.5 mm
Pin Material	Al-Br
Lug diameter	104mm
Lug thickness	14mm or 13.5 mm
Link thickness	13.5 mm
Lug Material	XM-19
Link Material	Inconel 718
Mandrel material	34CrNiMo6
Design Load (ITER Cat 3)	155kN
Design load (ITER Cat 2)	116kN

Provision of electrical and thermal continuity.

The connections have to be dismantled and remade for PFC replacement

Connection replacement has to be performed remotely as active components are involved.

Multilink Attachments

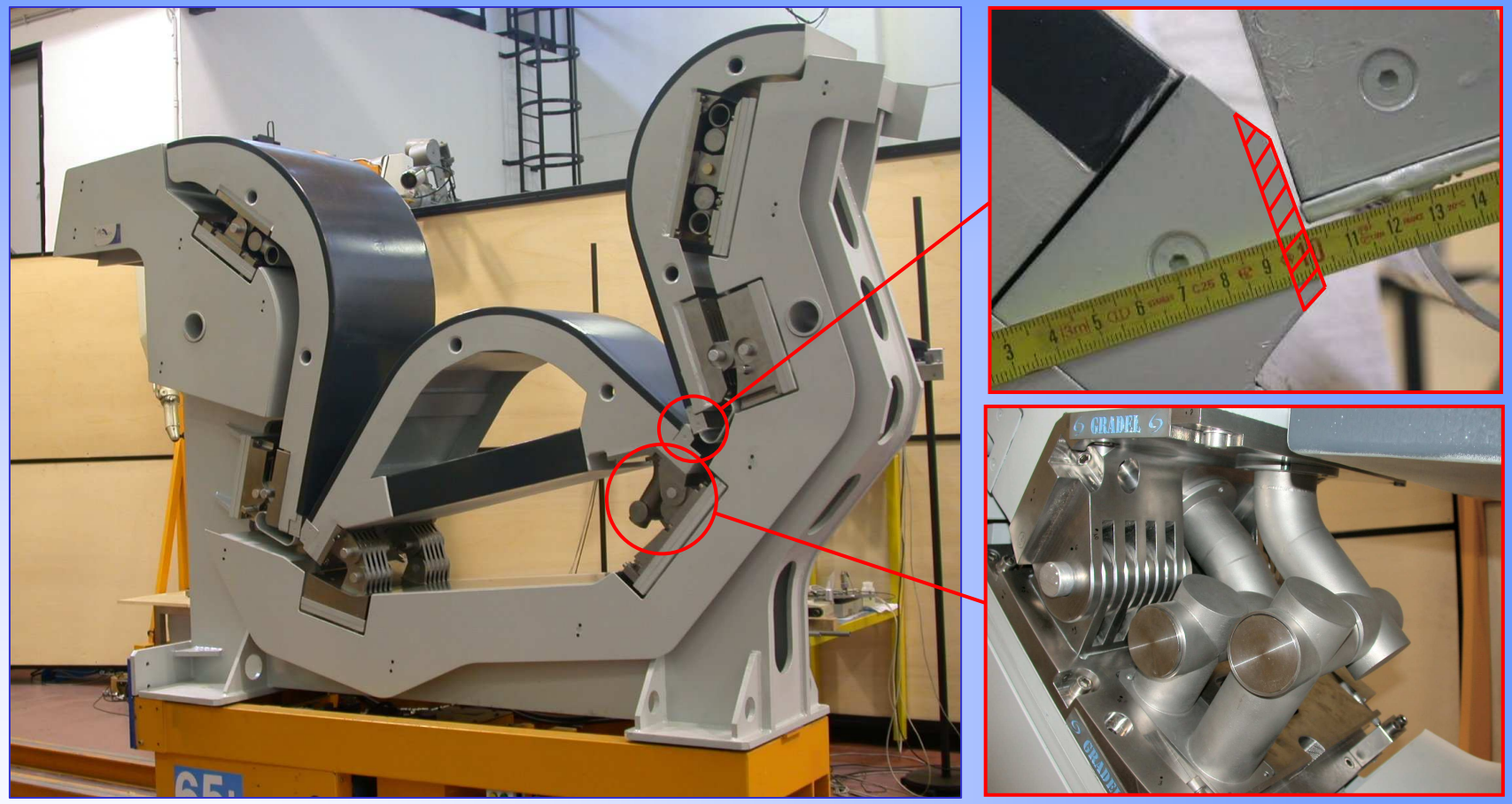

ENEA

PFC Assembly is achieved by using a loose fitting tubular pin, and expanding the pin to fit the connected components.

The method used for expanding the pin is to draw a tapered mandrel, through the hole in the tubular pin, by swaging the pin.

PFC Dismantling in achieved by pin removal/extraction.

Sleeved Pin

The sleeved pin design has been qualified for

- Load capacity, and connection functionality.
- Pin swaging – for component clearances, mandrel diameter and swaging force (up to 13 t)
- Pin Extraction – feasibility has been demonstrated; extraction forces determined for the actual connection lengths (6 t)

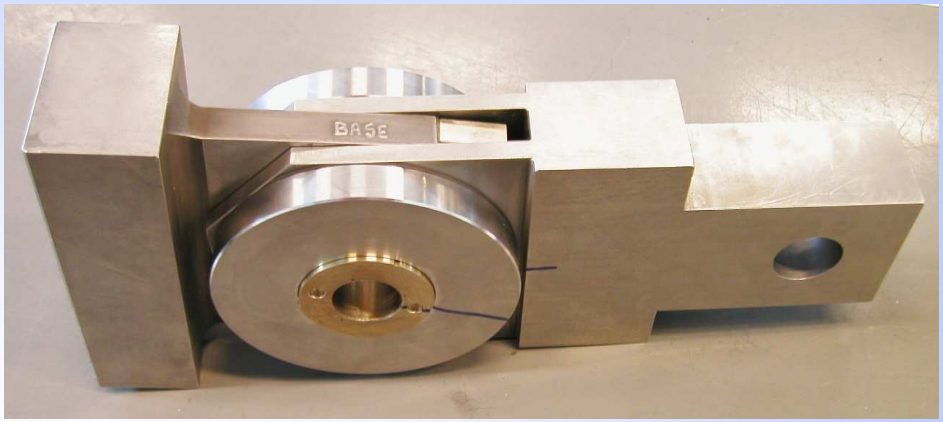

TAMPERE UNIVERSITY OF TECHNOLOGY
IHA - Institute of Hydraulics and Automation

NNC
Adding value through knowledge

EM loads due to VDEs

VDEs followed by a fast current quench

- **They generate the largest eddy currents and thus moments on the PFCs**
- **They drive the design of the PFC multilink attachments**

VDEs followed by a slow current quench

- **They generate the largest halo currents on the cassette body**
- **They drive the design of the CB/VV locking system**

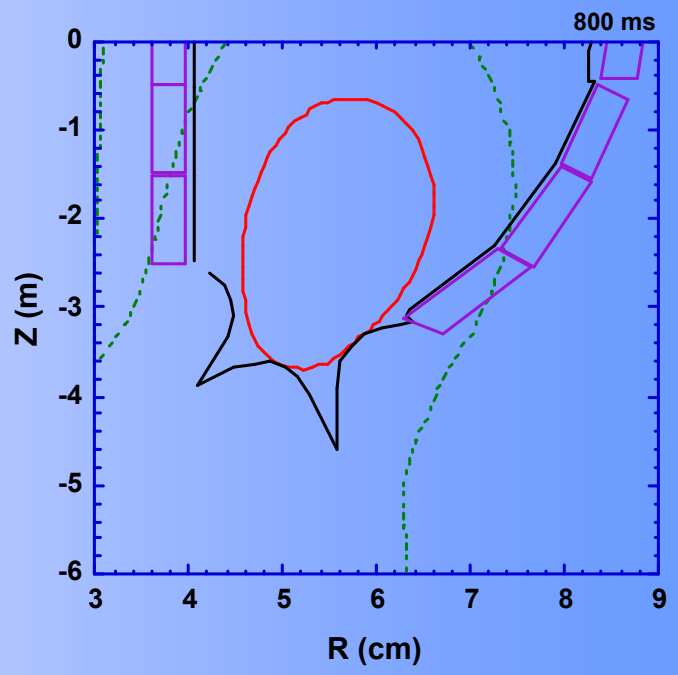

Downward VDE simulation

Full cassette model (CB, DL, 2 OVT, 2 IVTT)

LT – Calcoli-Efremov

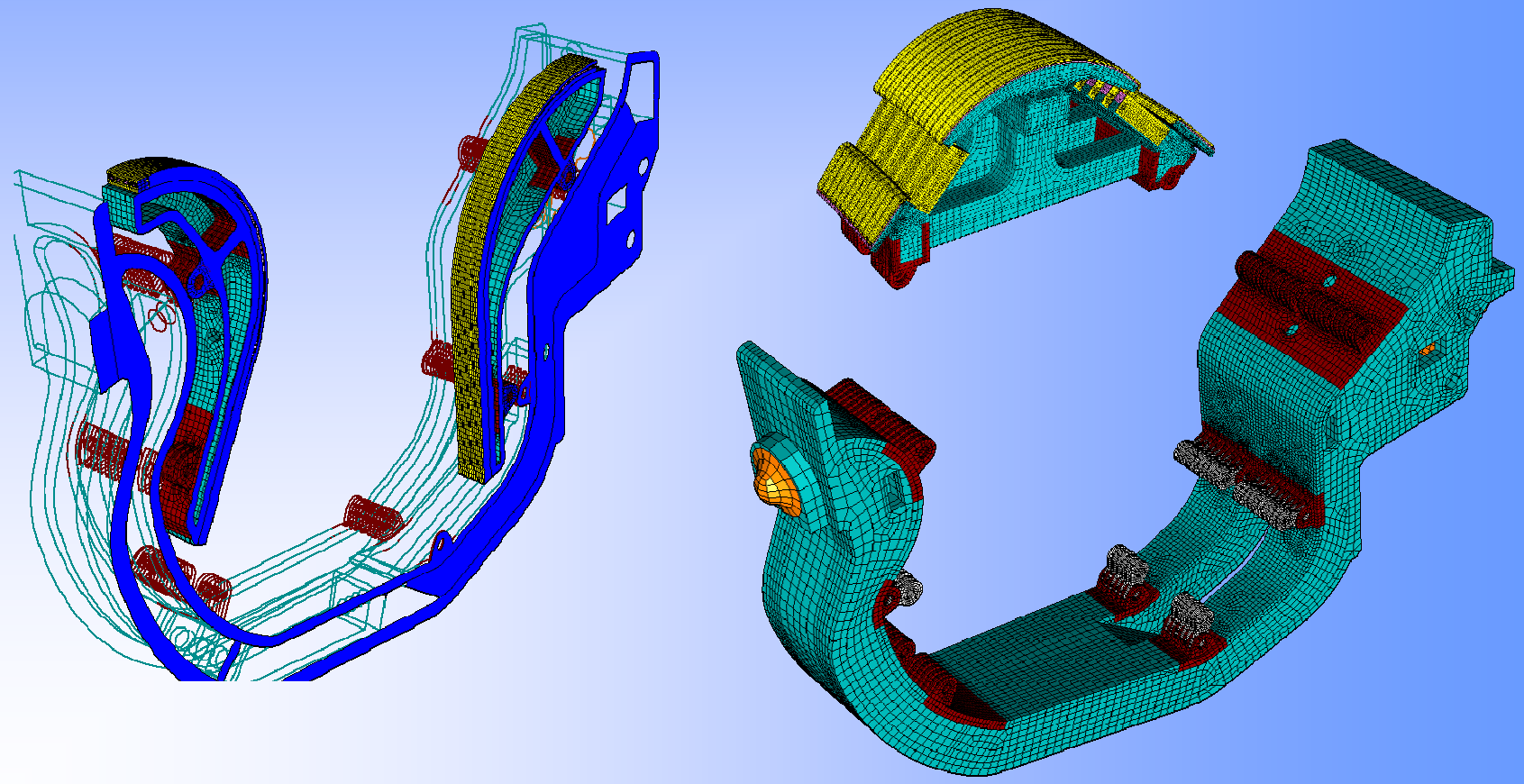

Summary for EM loads:

SDVDE-II, SDVDE-III, FDVDE-II, FDVDE-III
(linear and exponential events)

Module of EM forces is within **|F|=0.43…1.98 MN**

⬇

in ~ **5…22 times** more than Dead Weight of Divertor cassette

Maximum |F| is at SDVDE-III, case “inward”.

Module of EM moments is within **|M|=0.3…2.43 MN*m**

(relatively to mass center Xc=5.6 m, Zc= -3.9 m)

⬇

Maximum |M| is at FDVDE-III

(The main integral load is the vertical moment component Mz=2.4 MN*m, it gives **static** toroidal reaction forces Fy ~±0.8 MN in CB inner and outer supports)

CB-VV locking system

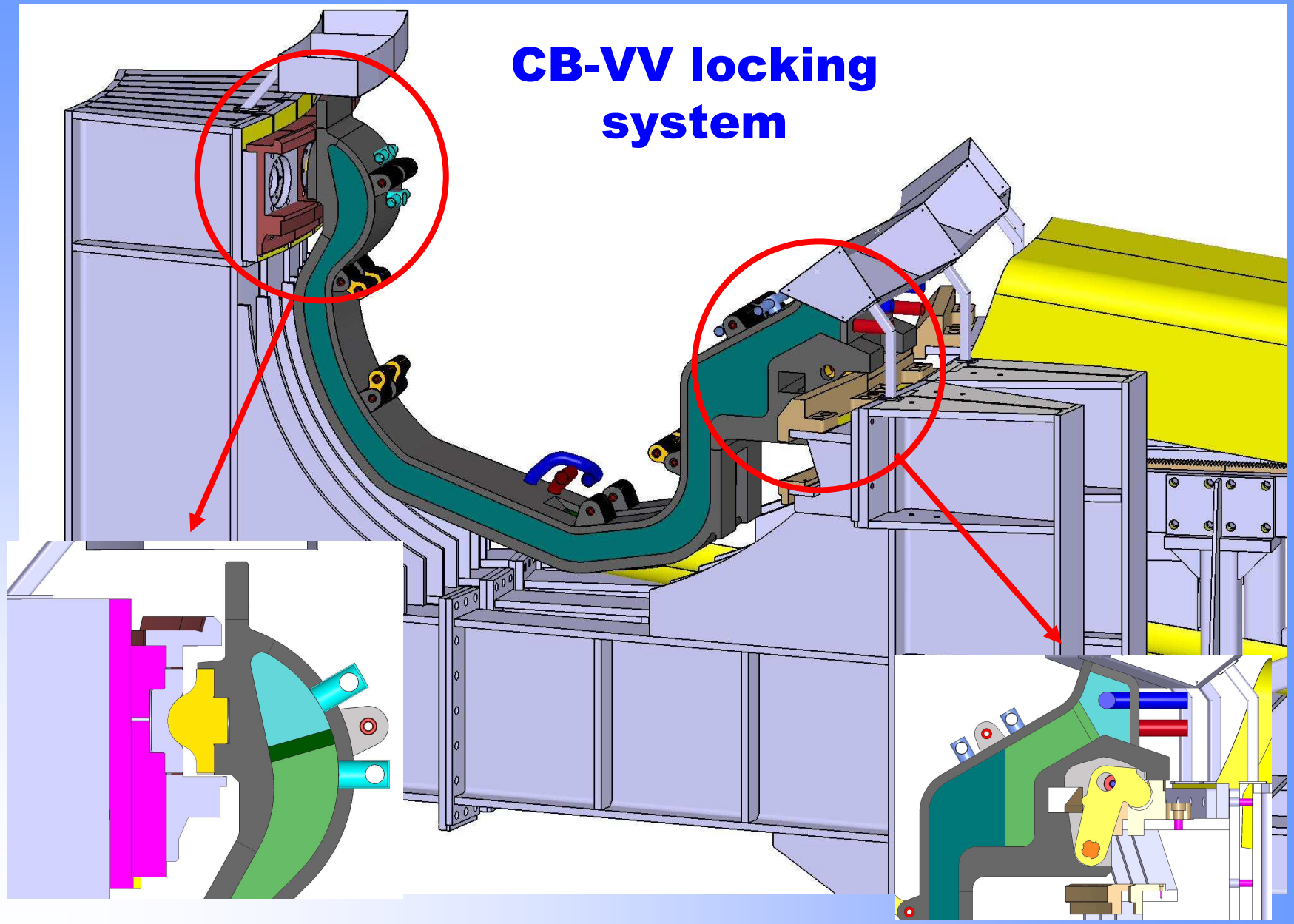

Preload of bolts and cassette Body (CB)

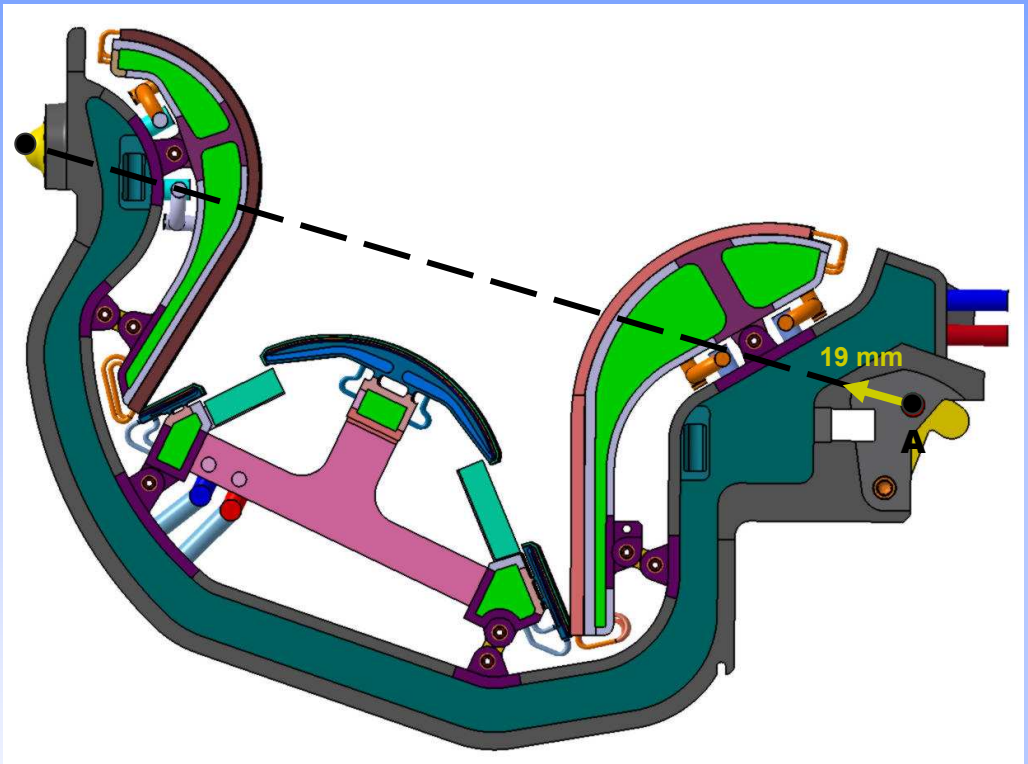

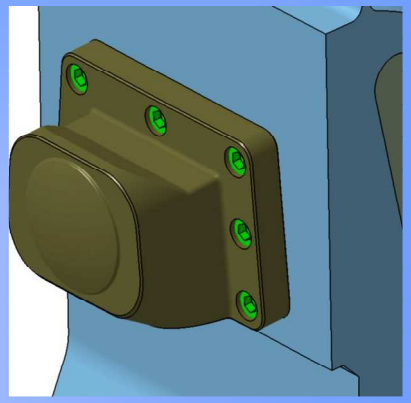

Latest solutions

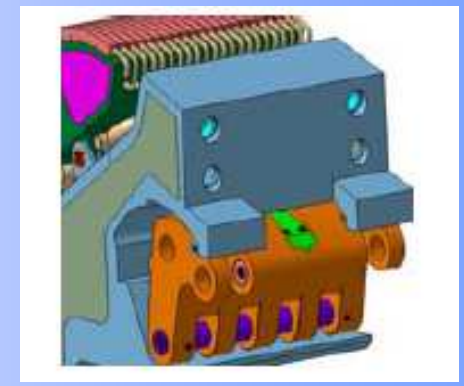

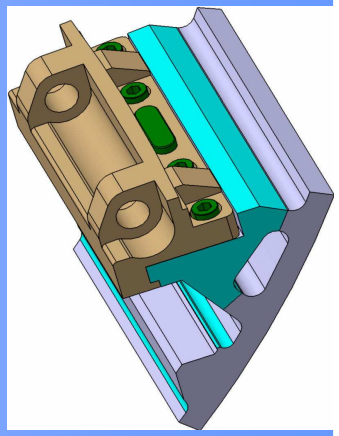

CB radial preload force F_R=
345 kN (19 mm displacements)

R&D results

Definitions

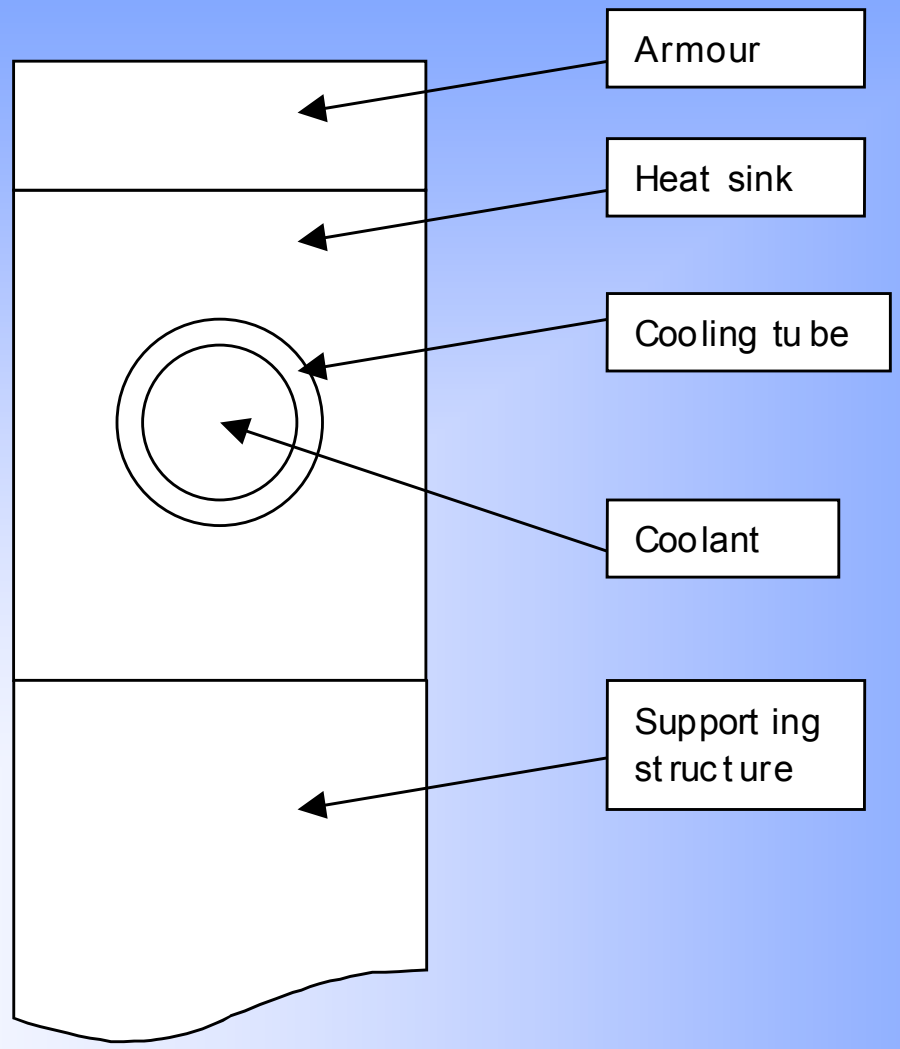

CFC to heat sink joints

CFC

Pure copper interlayer

CuCrZr

AMC
Pre-brazed casting
Brazing

HIP'ing
Hot Radial Pressing
Brazing
EB welding

W to heat sink joints

Tungsten

Pure copper interlayer

CuCrZr

Cu casting

HIP'ing
Hot Radial Pressing
Brazing
EB welding

Option 1

W flat tiles with tube cooling (upper half)

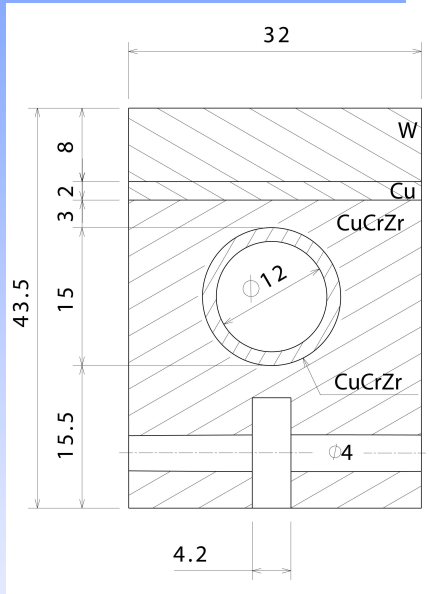

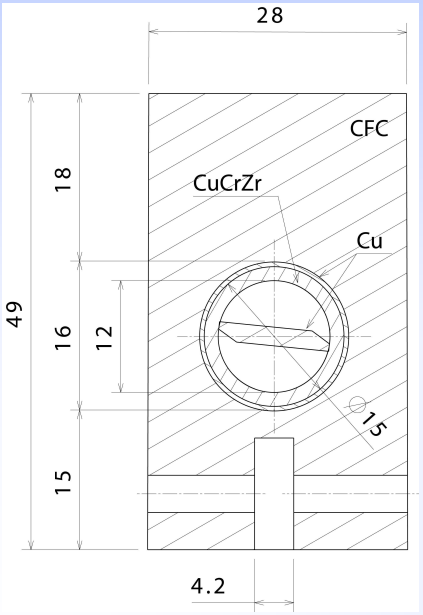

CFC monoblocks (bottom half)

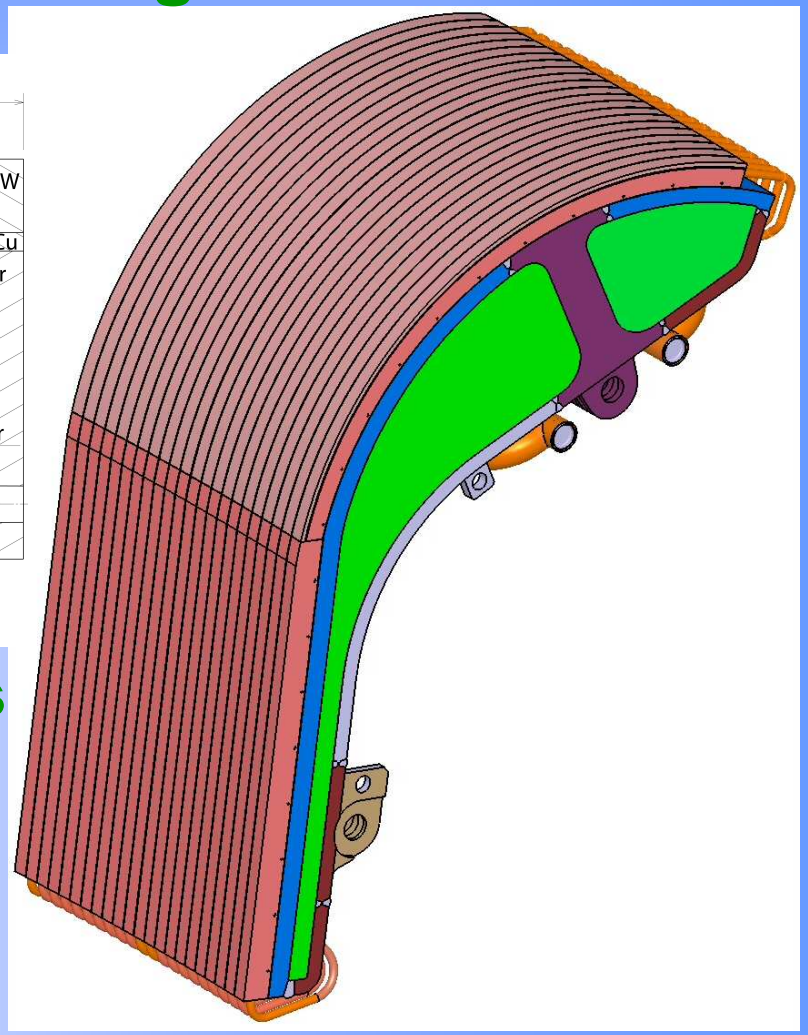

Option 2 (superseeded)

W monoblocks (upper half)

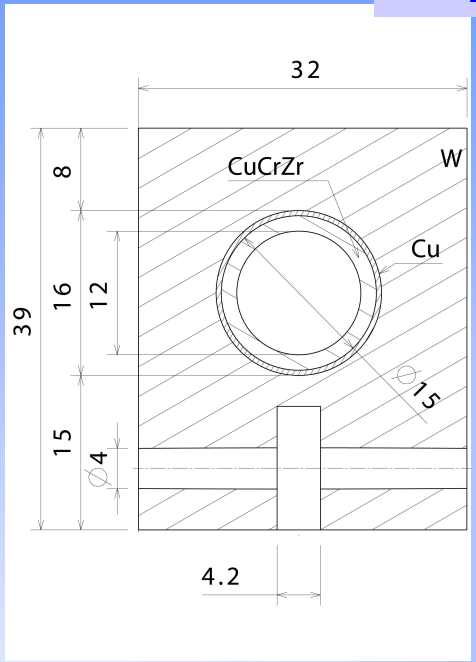

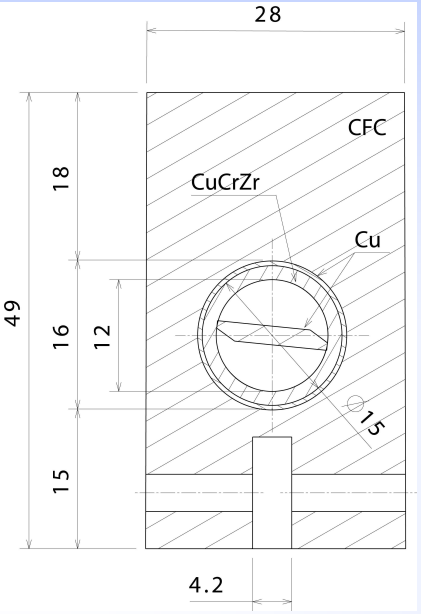

CFC monoblocks (bottom half)

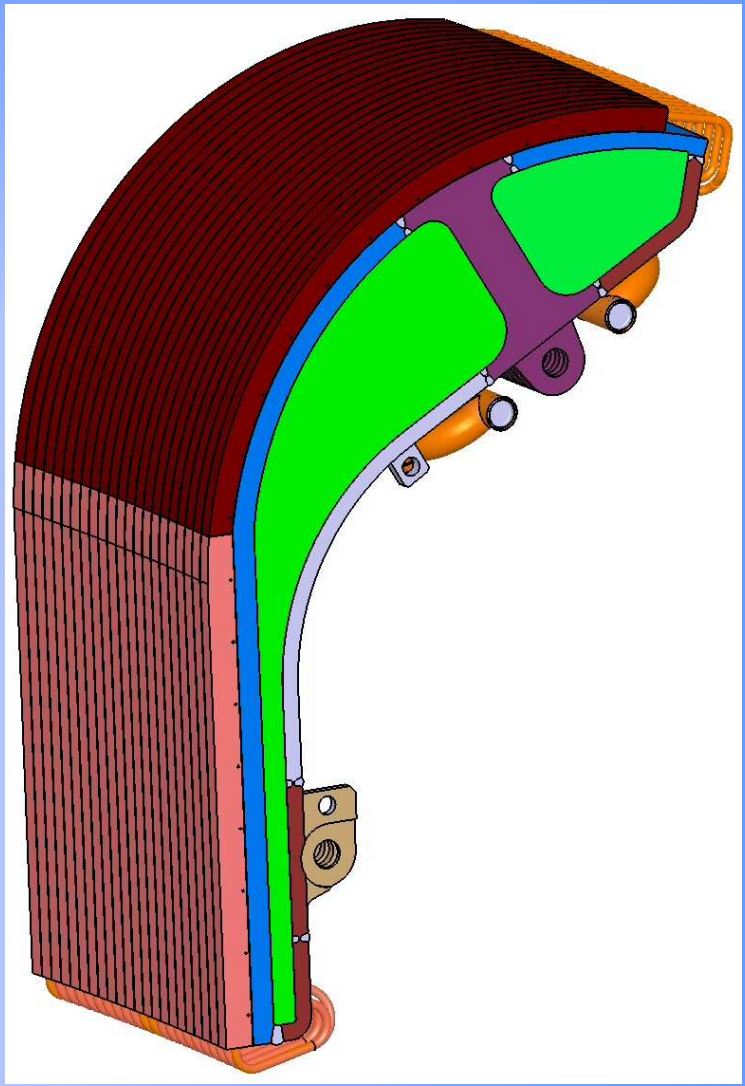

High heat flux results

Vertical Target
Medium-Scale Prototype

Test results

W macrobrush:
15 MW/m² x 1000 cycles
CFC monoblock
20 MW/m² x 2000 cycles
CHF test > 30 MW/m²

PLANSEE

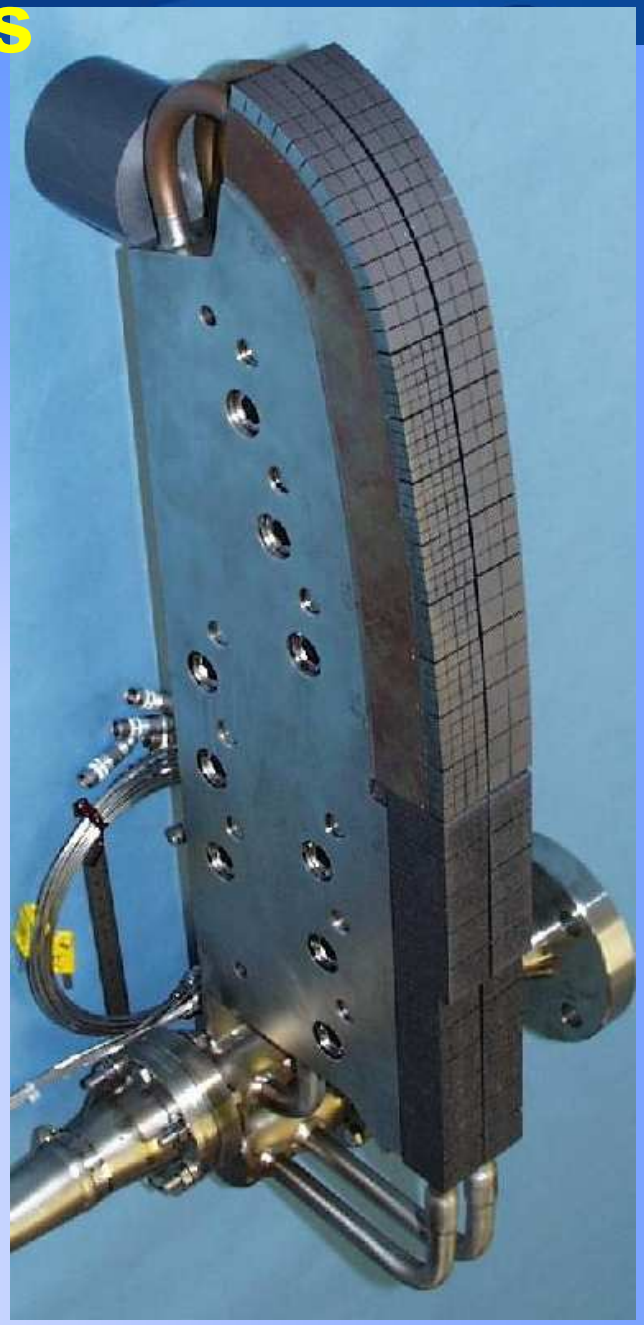

Vertical Target
Full-Scale Prototype

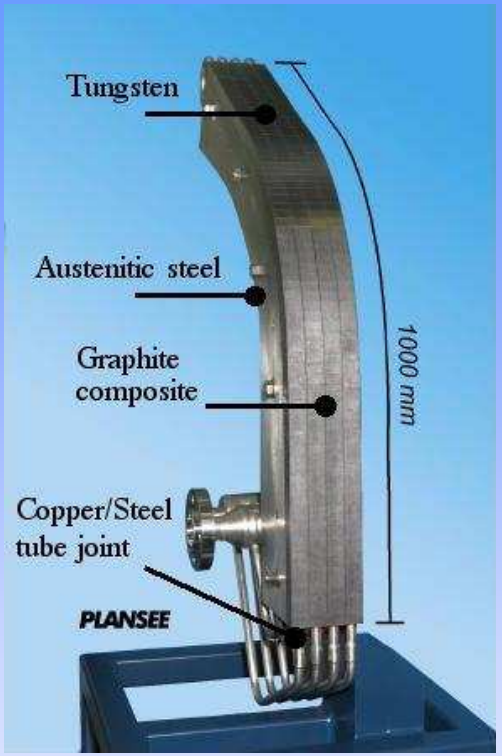

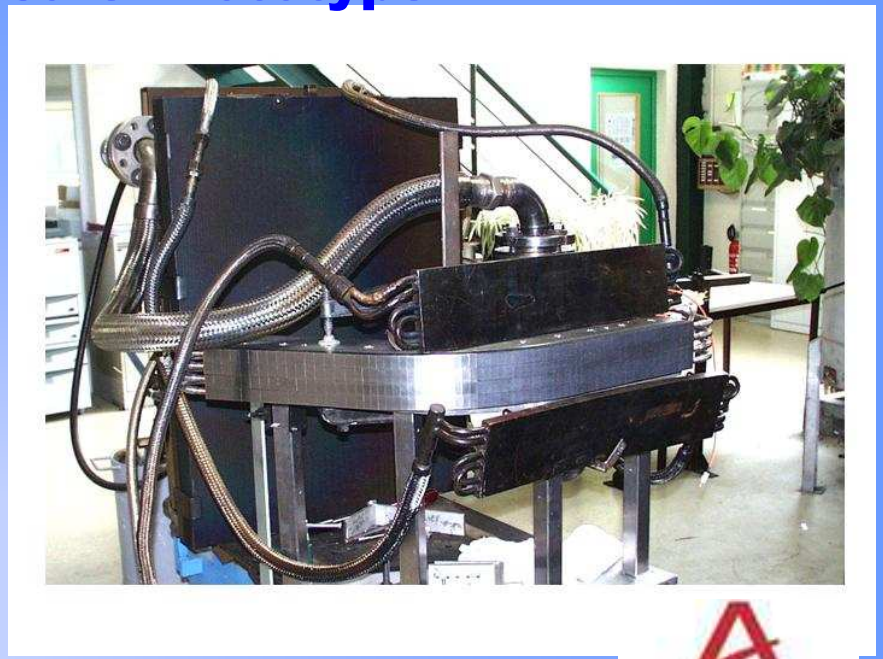

W monoblocks:

10 MW/m² x 1000 cycles

CFC monoblock

10 MW/m² x 1000 cycles
20 MW/m² x 1000 cycles
23 MW/m² x 1000 cycles

Vertical Target component with W armour

Tested in FE200 facility (50°C-12 m/s – 3.3MPa)

5 MW/m^2 x 100 cycles

10 MW/m^2 x 1000 cycles

20 MW/m^2 x 1000 cycles

Vertical Target Medium Scale Prototype by Hot Radial Pressing

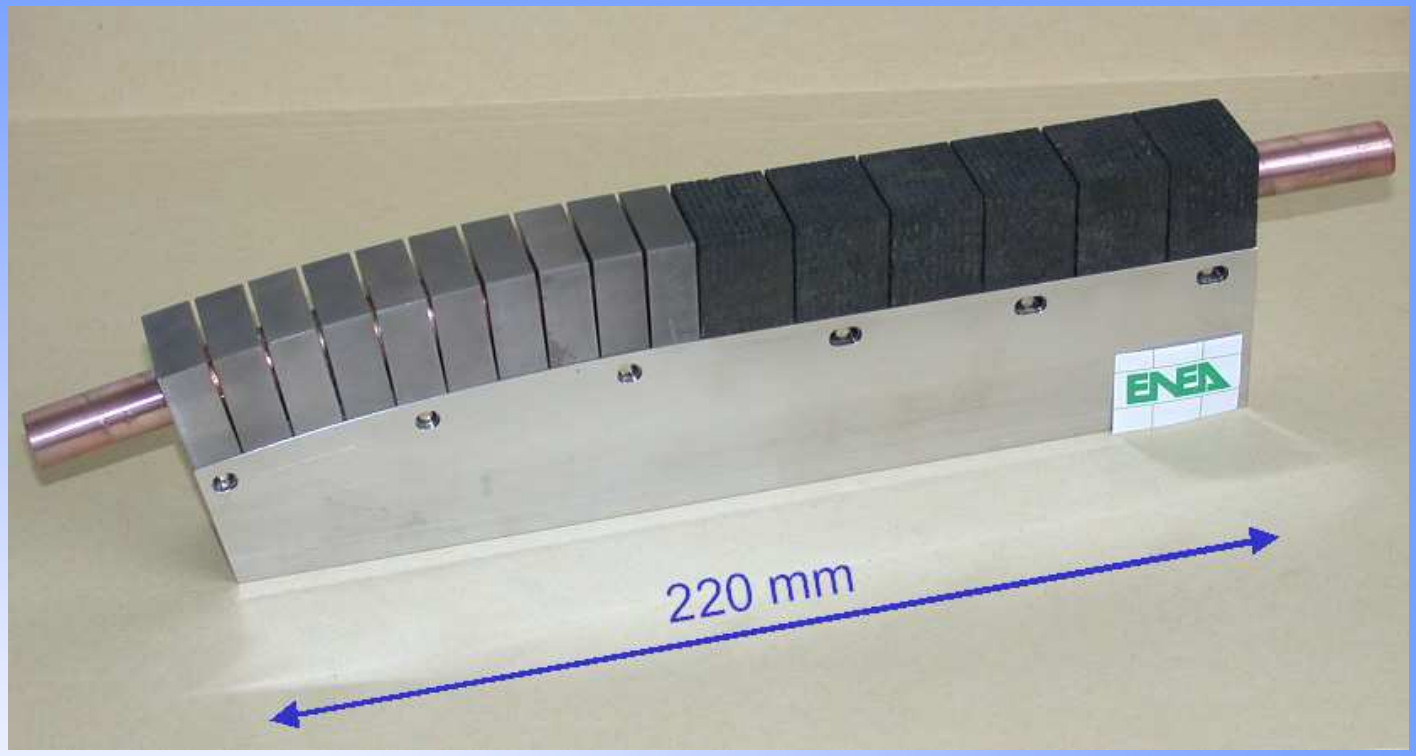

3000 cycles at 10 MW/m^2 on CFC and W

2000 cycles at 20 MW/m^2 on CFC and 15 MW/m^2 on W

experimental critical heat flux of 35 MW/m^2 was determined on the CFC part

Neutron-Irradiation Experiments

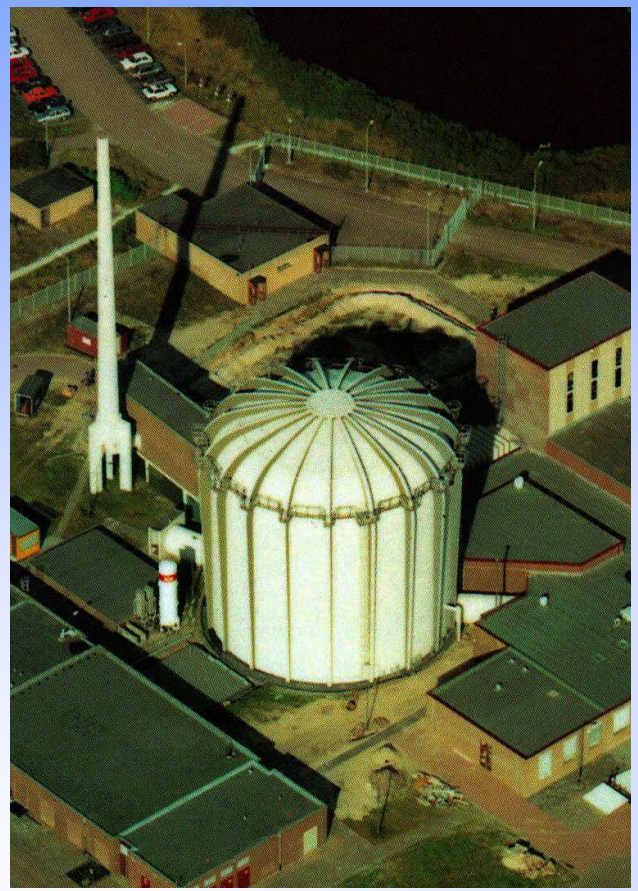

High Flux Reactor
Petten, Netherlands

PARIDE 3:

- temperature: 200°C
- target fluence: 0.2 dpa

PARIDE 4:

- temperature: 200°C
- target fluence: 1 dpa

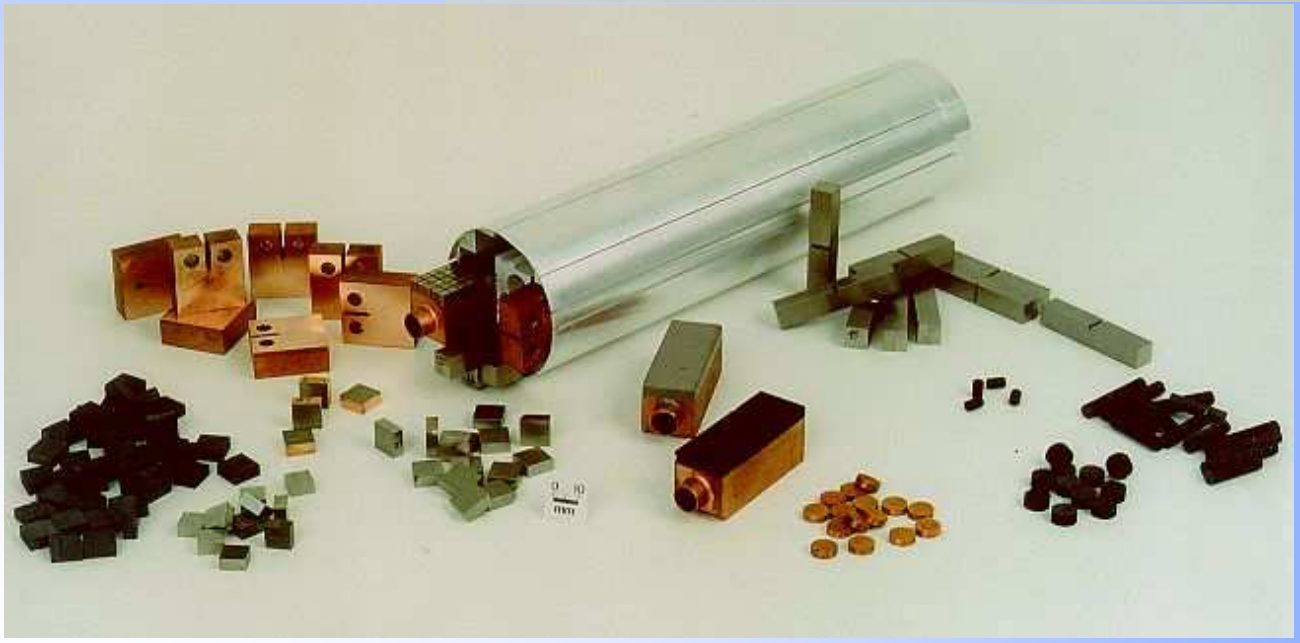

Decrease of thermal conductivity in CFC and W

CFC

At RT, thermal conductivity was reduced to 10% of the unirradiated value after 1 dpa.
At 800°C, the thermal conductivity was reduced to 1/3 of the unirradiated value at 1 dpa.
Partial recovery of the CFC thermal conductivity was observed during the post-irradiation high heat flux test (see figure below).

W

At RT, thermal conductivity was reduced to 73% of the unirradiated value after 0.6 dpa (which corresponds to 1 dpa in CFC).
At 800°C, the reduction of the thermal conductivity was negligible.

The degradation of the W thermal conductivity under irradiation will not be an issue for the ITER divertor operation during the T phase.

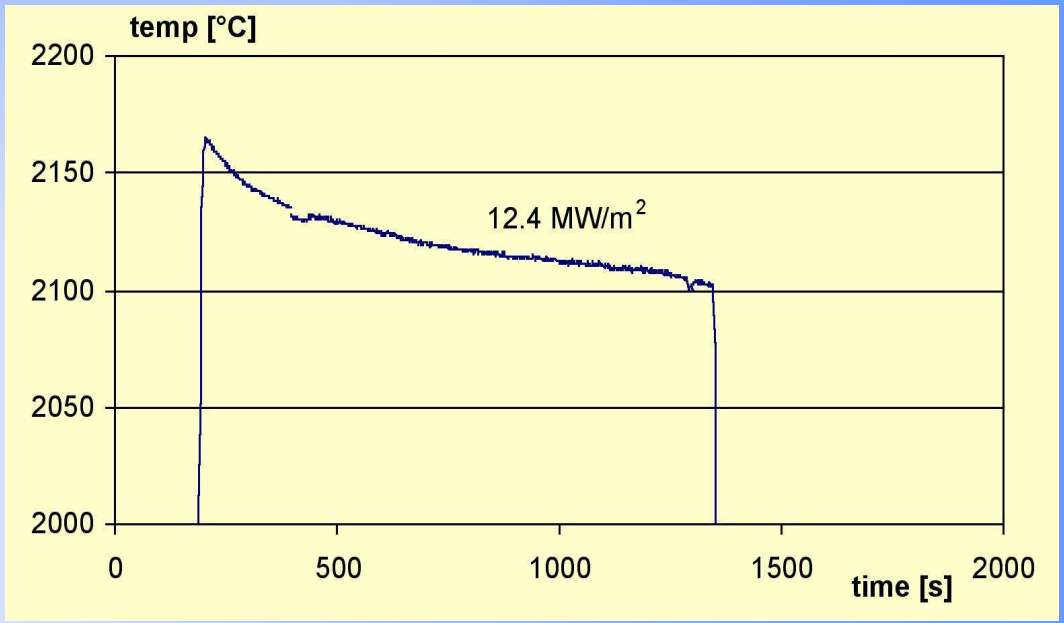

Partial recovery of the thermal conductivity in a CFC monoblock irradiated at 0.35 dpa during high heat flux test

Testing of irradiated CFC Mock-Ups

After irradiation to 0.2 dpa, CFC flat tile showed a failure limit of 19.5 MW/m^2.

After irradiation to 0.2 dpa, CFC monoblock was tested at 12 MW/m^2 without failure. (Test limited by decrease of the CFC thermal conductivity).

After irradiation to 1 dpa, test was limited to 15 MW/m^2 for both flat tiles and monoblocks

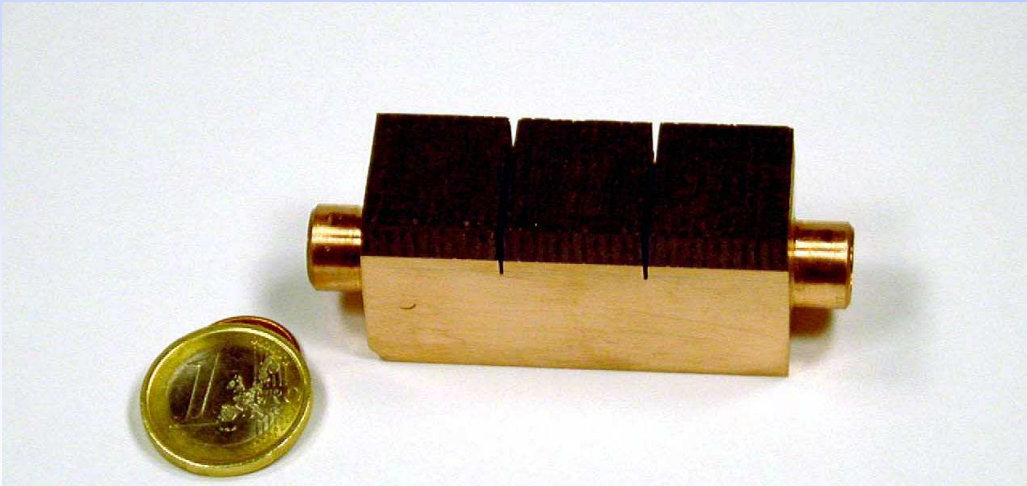

CFC flat tile

CFC monoblock

Testing of irradiated W Mock-Ups

Unirradiated

- 1000 cycles x 14 MW/m^2 – no failure

200°C, 0.1 and 0.5 dpa in tungsten

- Failure limit: 10 MW/m^2

Unirradiated

- 1000 cycles x 20 MW/m^2 – no failure

200°C, 0.1 and 0.5 dpa in tungsten

- Successfully tested up to 18 MW/m^2

The irradiated pure Cu interlayer leads to a reduction of the high heat flux performances in a flat tile geometry.

The monoblock solution seems not to be affected by this problem.

Thermal fatigue testing of a tungsten macrobrush mock-up irradiated in the PARIDE 3 experiment

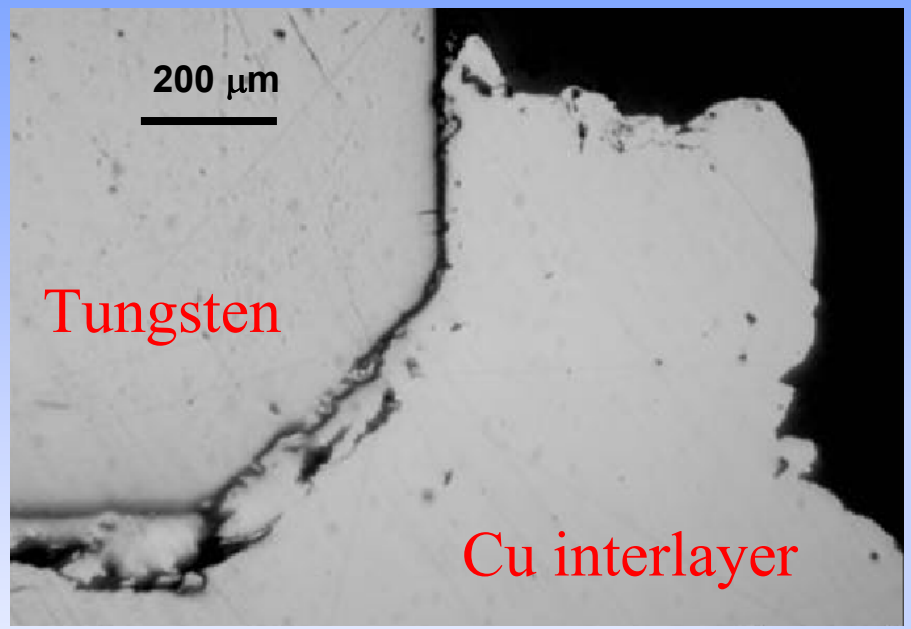

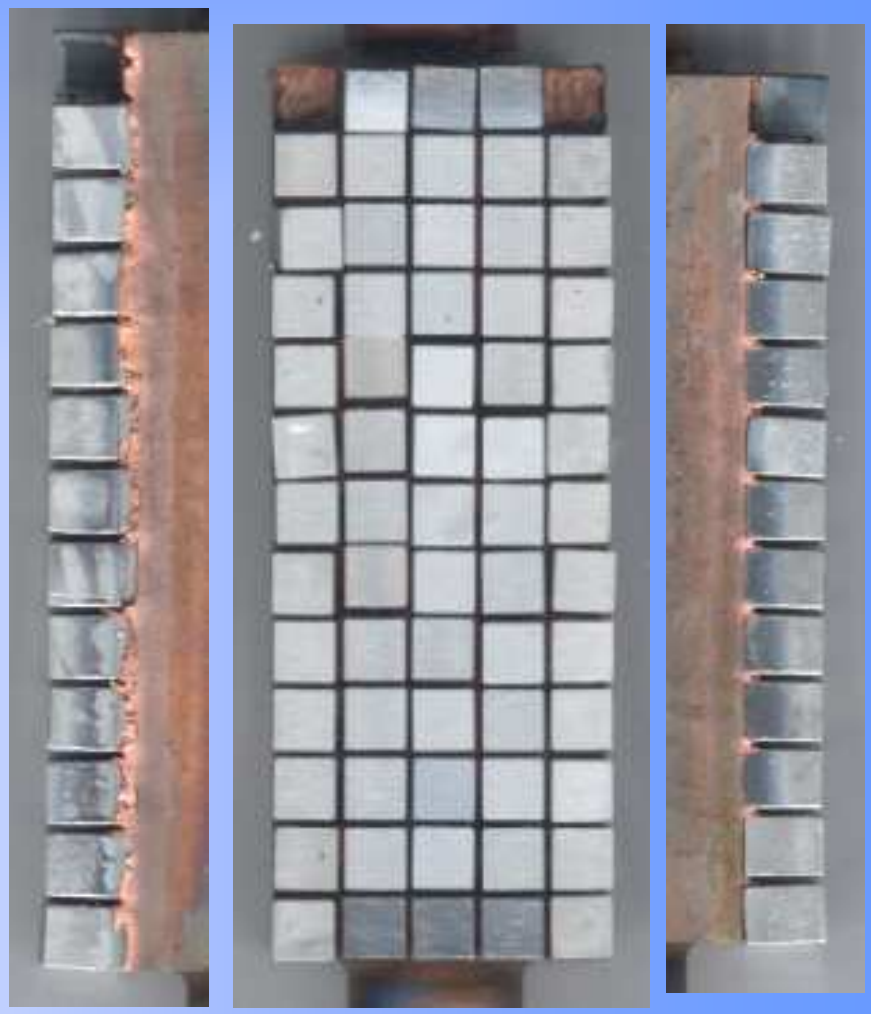

Irradiation condition:
200°C – 0.1 dpa (in W)

High heat flux test:
1000 cycles at 10 MW/m²

Development of acceptance criteria

Scope

To provide an analytical and experimental basis for the definition of acceptance criteria for the divertor PFCs

To correlate defect with the non-destructive testing evidence (US and IR thermography).

Milestones

The upgrading of the SATIR infrared examination test bed to increase the defect detection capability for CFC armoured components

Manufacturing of artificial defect mock ups (Plansee, Ansaldo)

US testing, SATIR, FEM analysis (Ciemat-Tecnatom, CEA)

HHF testing (AREVA)

US testing, SATIR infrared testing (Ciemat-Tecnatom, CEA)

Non-destructive and destructive examinations of mock-ups (FZJ)

Definition of acceptance criteria

Transient Thermography Inspection

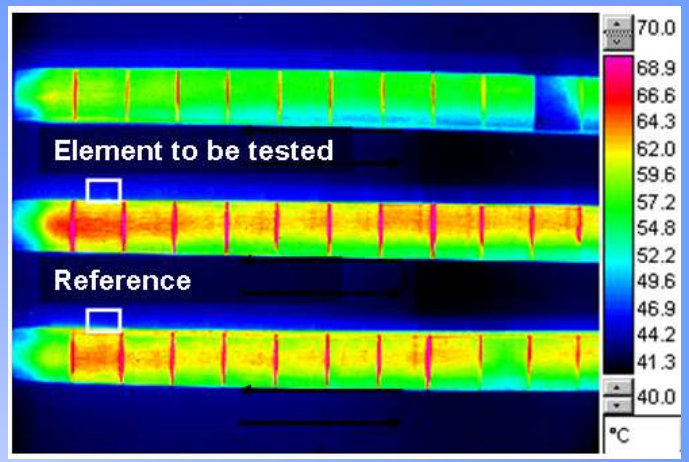

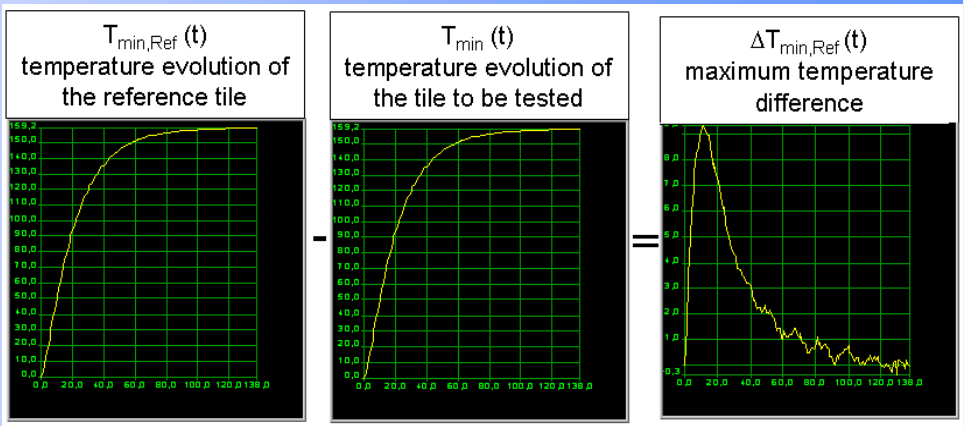

CFC monoblock mock ups

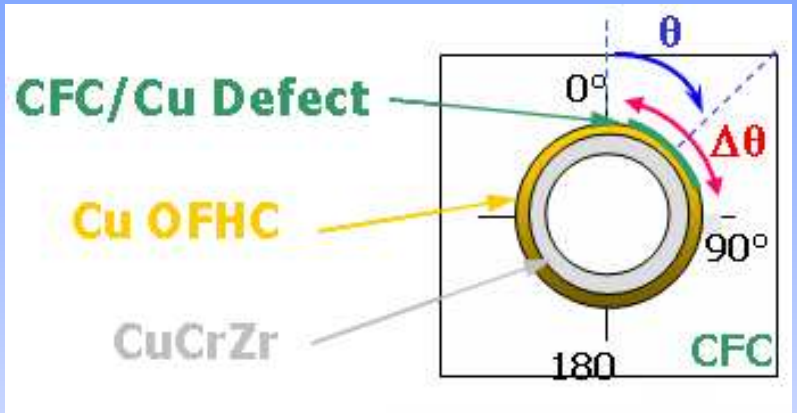

Defect position	CFC/Cu	Location angle = 0°	Δθ=20°, 35°, 50°, 65°
Defect position	CFC/Cu	Location angle = 45°	Δθ=20°, 35°, 50°, 65°
Defect position	Cu/CuCrZr	Location angle = 0°	Δθ=40°
Defect position	Cu/CuCrZr	Location angle = 45°	Δθ=20°, 40°, 60°

W monoblock mock ups

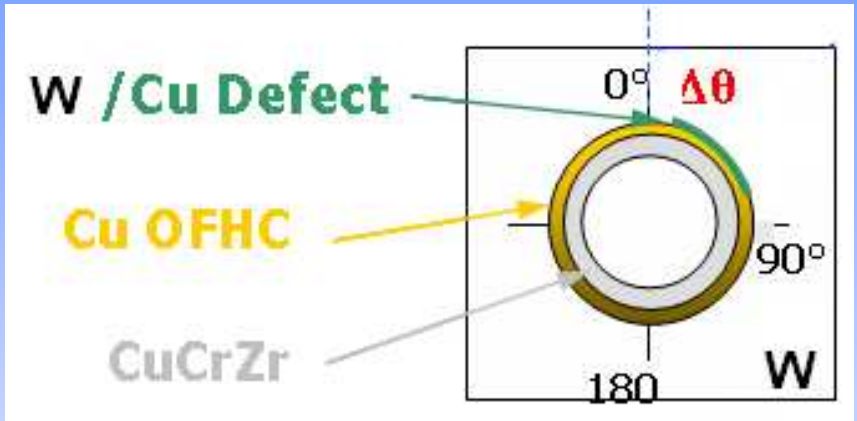

Defect position	W/Cu	Location angle = 0°	Δθ=20°, 35°, 50°, 65°
Defect position	Cu/CuCrZr	Location angle = 0°	Δθ=15°, 30°, 45°

Samples

There are **112 samples** split in two batches **:**

- 56 HIPing Technology → Plansee
- 56Hot Radial Pressing Technology → Ansaldo Ricerche

Each batch of **56 samples** includes **:**

- 28 CFC monoblocks
  - * 26 “short”
  - * 2 “high”
- 14 W monoblocks
- 14 W flat tiles

CFC monoblock (Ansaldo)

W flat tile (Plansee)

W monoblock (Ansaldo)

CFC monoblock (Plansee)

Investigation of repair techniques

Activity ongoing at Plansee and Ansaldo

CFC, W Monoblock basic

CFC, W Monoblock repaired

PLANSEE

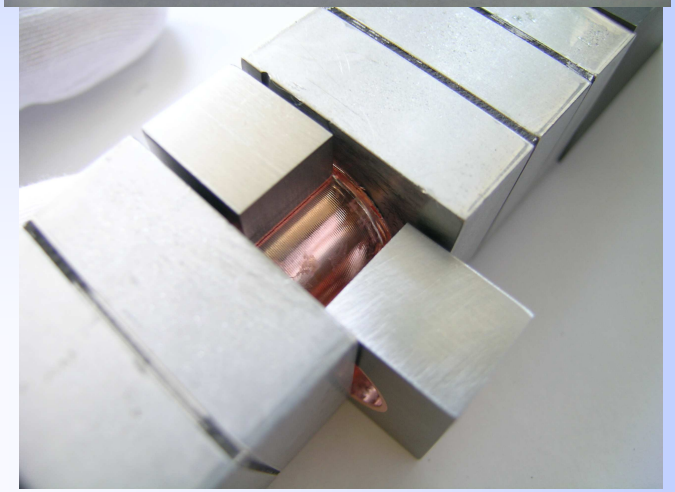

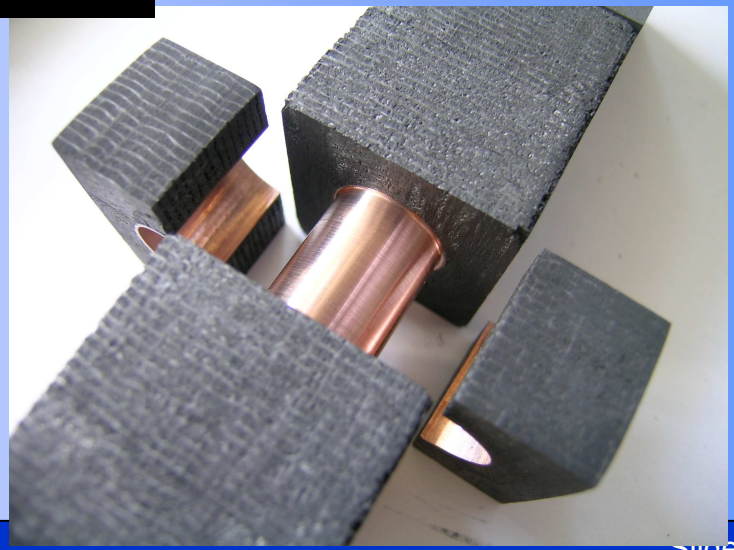

Qualification of different grade CFC mock ups

SNECMA NB41, New Dunlop 3D, SNECMA N11, SNECMA N31

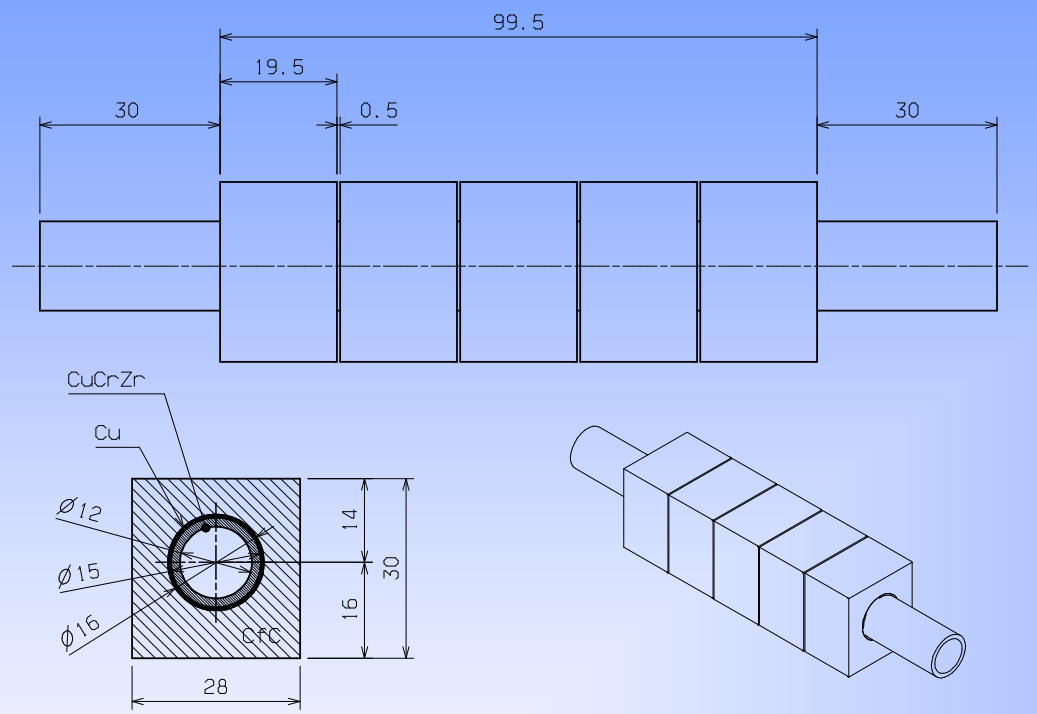

HHF test campaign

Screening test at 5 MW/m2

3000 cycles at 10 MW/m2

Screening test at 5 MW/m2

1000 cycles at 20 MW/m2

Screening test at 5 MW/m2

Full scale dummy prototype manufacturing and testing

Objectives

Address some manufacturing issues

Verify the hydraulic design of the divertor.

Definition of a proper procedure to drain and dry the divertor components.

The assembly and integration procedures to be demonstrated on a full-scale prototype with realistic tolerances, dimensions, weight and accessibility.

Outer and Inner Vertical Target Dome Liner, Cassette

AnsaldoRicerche
Società Finmeccanica

Hydraulic testing of divertor prototypes.

Pressure drop vs.flow rate have been measured on Outer and Inner Vertical target and Dome Liner (ENEA Brasimone)

CEF 1 design parameters

Tank design pressure (MPa)	0.5
Loop design temperature (°C)	140
Pump max. flowrate (kg/s)	2 x 70
Pump max head (MPa)	2 x 1.2
Electrical heater power (kW)	2 x 60

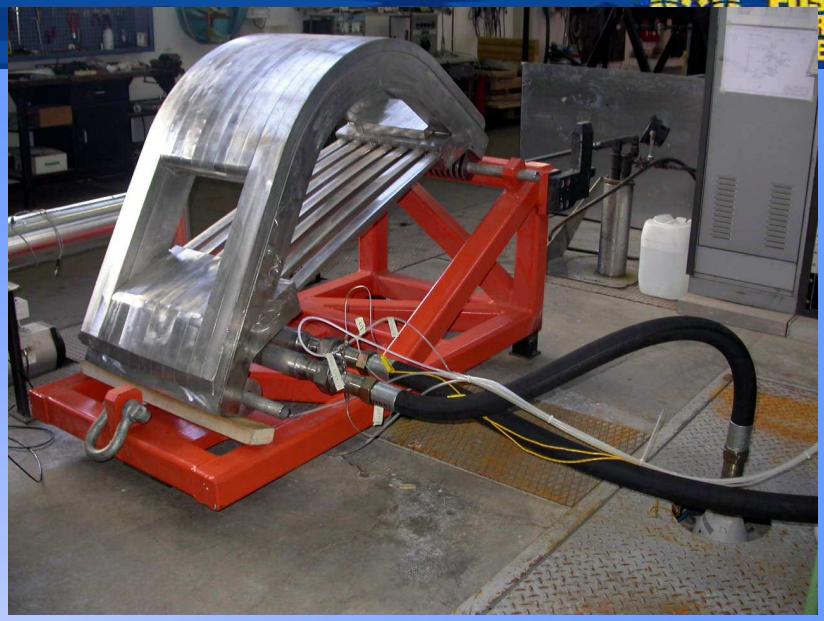

Hydraulic testing of DL

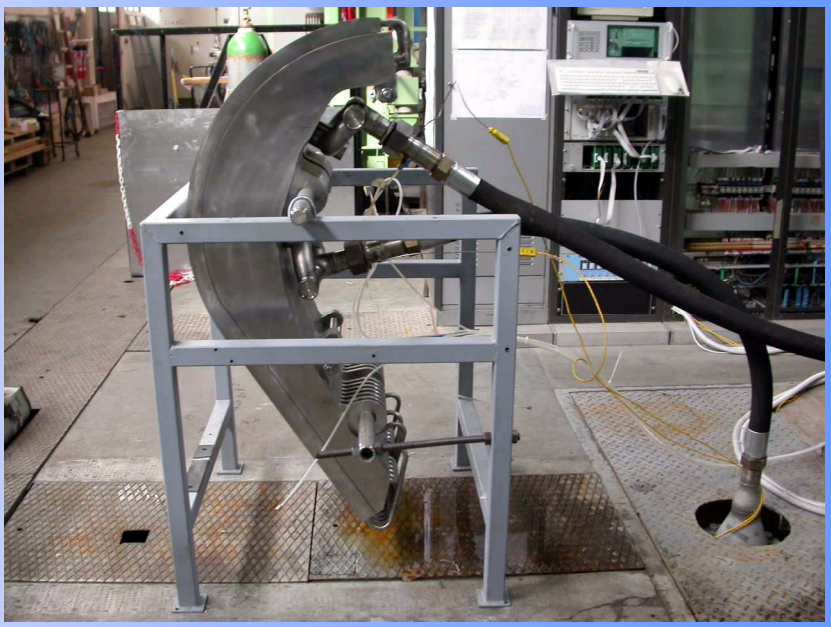

Hydraulic testing of IVT

Divertor coolant design parameters

Inlet temperature:	**100 °C**
Inlet water pressure:	**4.3 MPa**
Total pressure drop:	**1.21 < 1.4 MPa**
CHF margin:	**1.57 > 1.4**
Total flow rate:	**934 < 1000 kg/s**

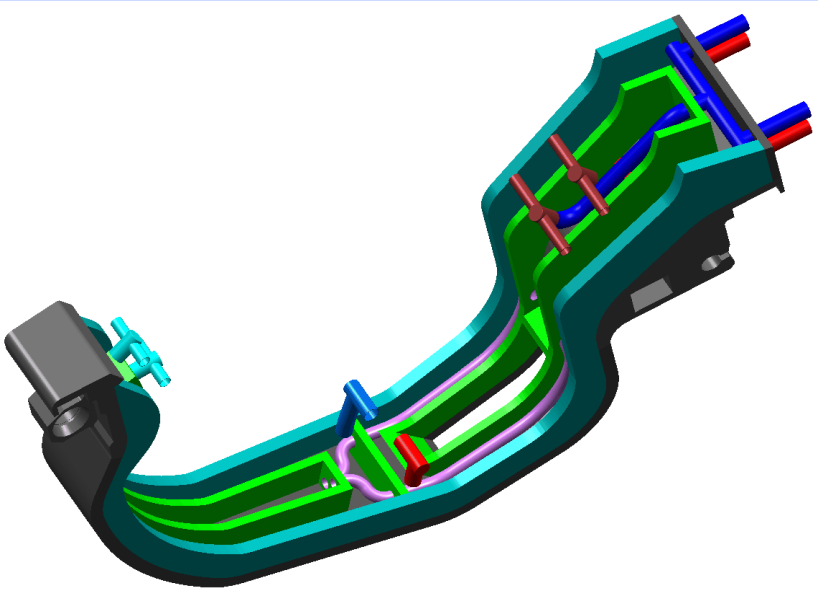

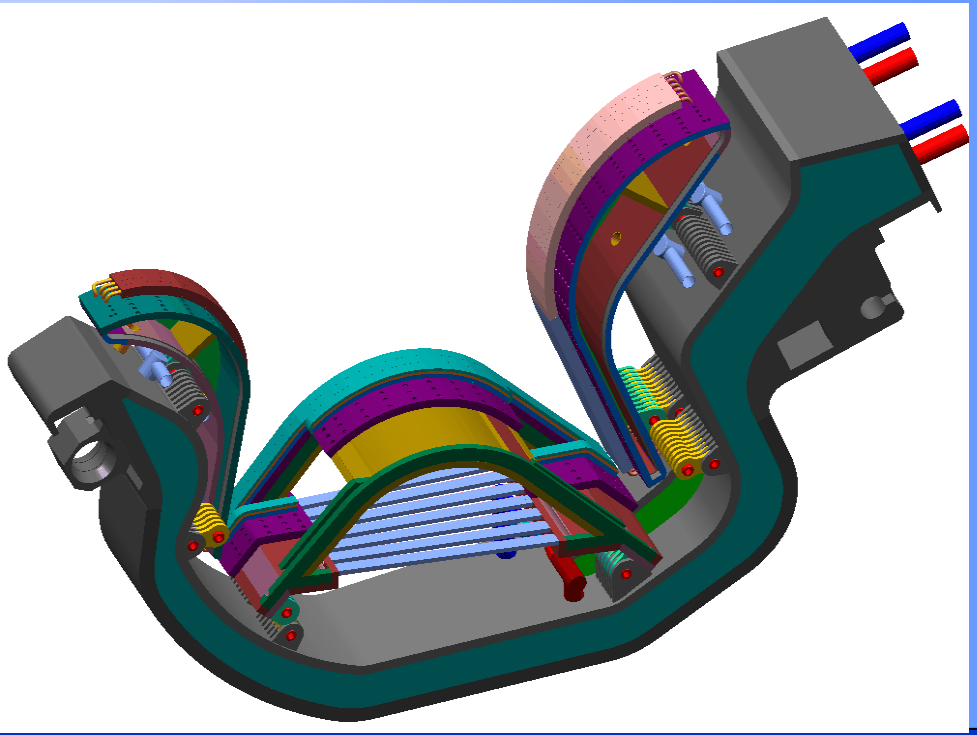

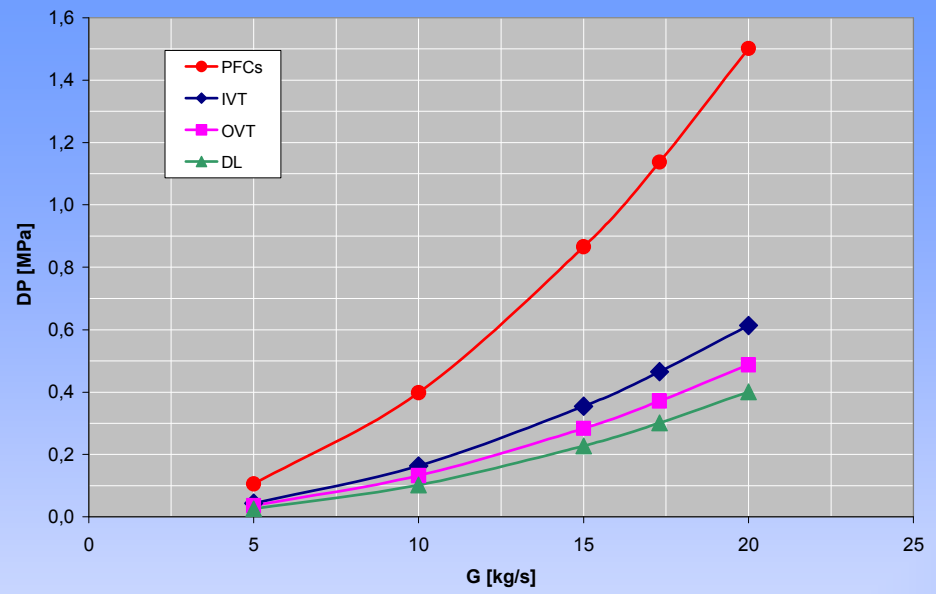

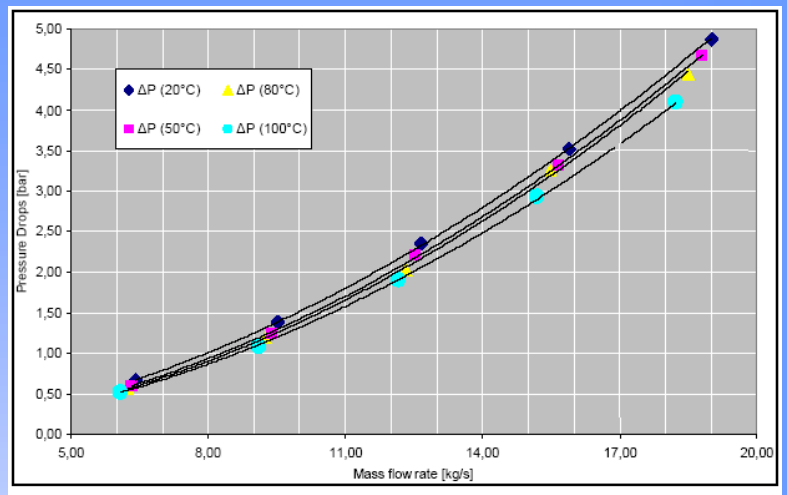

Pressure drops through OVT: experimental results

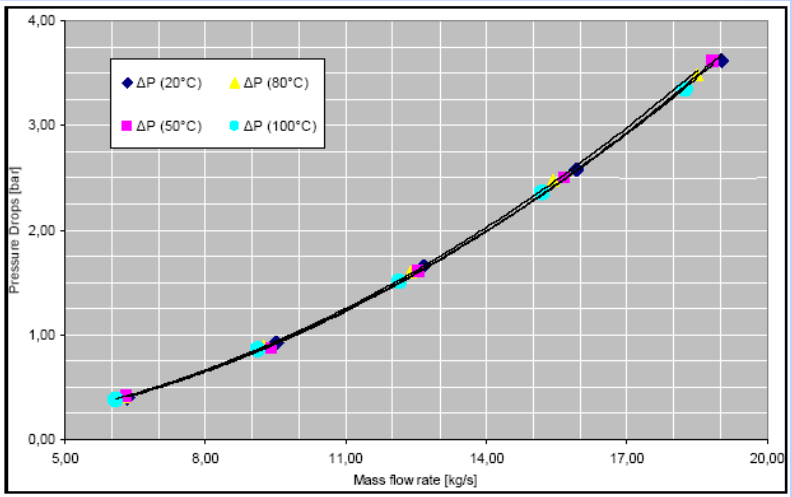

Pressure drops through DL: experimental results

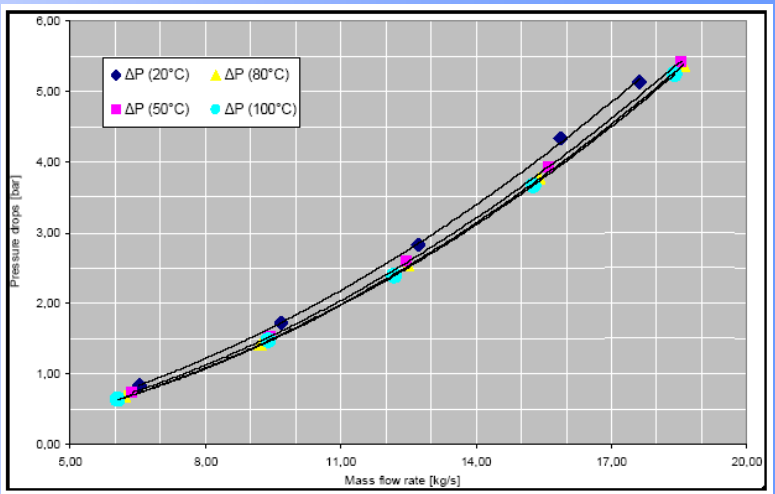

Pressure drops through IVT: experimental results

Comparison between experimental and numerical (Relap 5) pressure drops

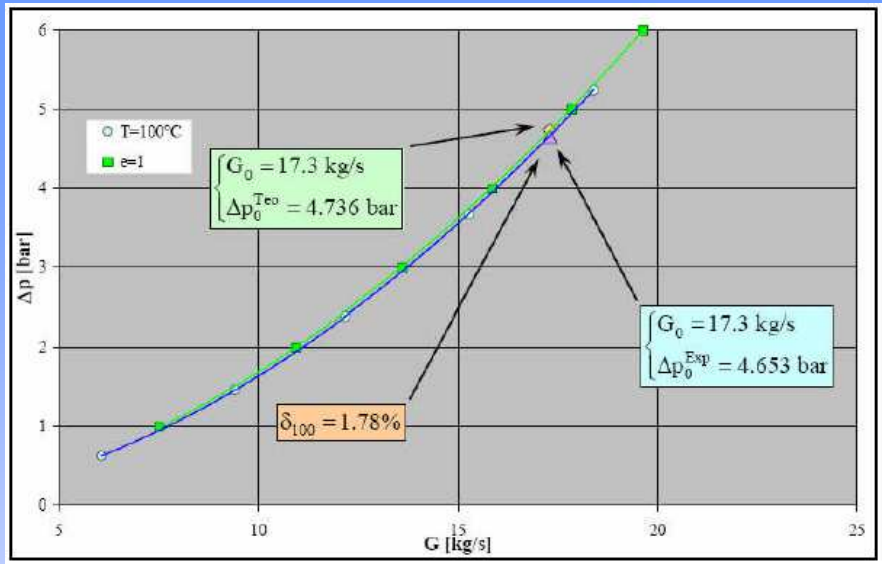

IVT comparison between experimental and theoretical results at T = 100°C

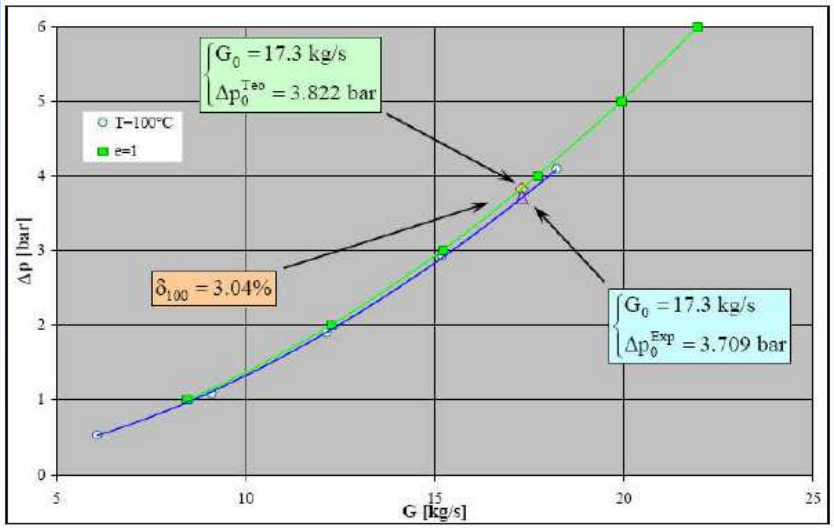

OVT comparison between experimental and theoretical results at T = 100°C

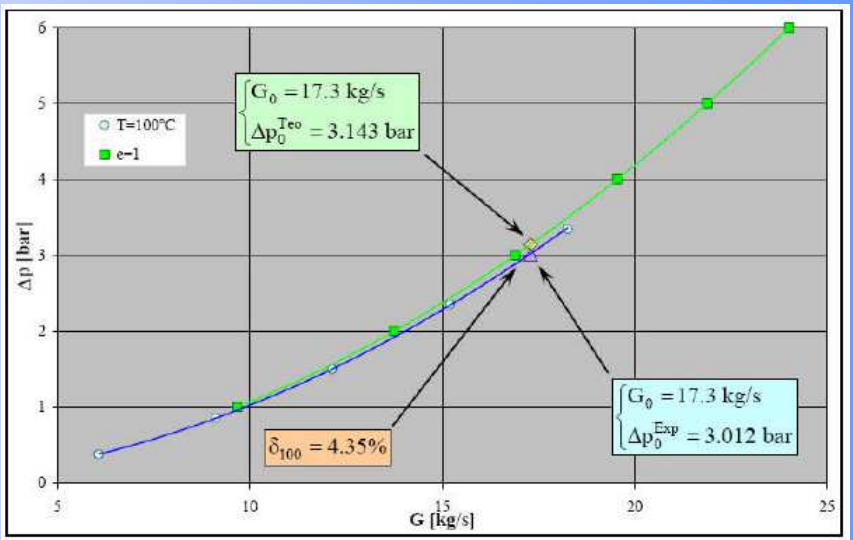

DL comparison between experimental and theoretical results at T = 100°C

Time Schedule

- Integration by the first half of 2008
- Hydraulic tests of divertor system by end 2008
- The full divertor prototype may be delivered to Finland for RH testing

•Divertor refurbishment platform (ENEA Brasimone)

DTP2 Tampere (Finland)

Procurement

Divertor Procurement Sharing

1.7 Divertor	Component	Credit (kIUA)	Sharing
P1	1: Cassette Body and Integration	11.2	
P2	2A: Outer Vertical Targets	28.5	
	2B: Inner Vertical Targets	20.2	
	2C: Dome	15.0	
	2D: High Heat Flux Tests	8.0	
	Total	**82.9**	

Reference:
Final Report of Negotiations on ITER Joint Implementation
(Attachment 2_C "Common Understandings on Procurement Allocation"), 1 April 2006

EU Divertor Procurement Packages

17.P1 “Divertor Cassette Integration”

- 1 full-scale prototype + 54 cassettes + 6 spares
- Installation of the PFCs
- Installation of the diagnostics equipments

17.P2 “Divertor Plasma-Facing Components

- 1 full-scale prototype + 54 Inner Vertical Target + 6 spares

Divertor Vertical Target Qualification Prototypes

The aim of the activity is to demonstrate the EU Party capability to carry out the VT procurement, in advance of the procurement start.

The Party is ***"qualified"*** if at least 2 of the prototypes meet the acceptance criteria and at least one withstands the high heat flux qualification tests.

The contracts activities are started on Feb.2007 and are being completed

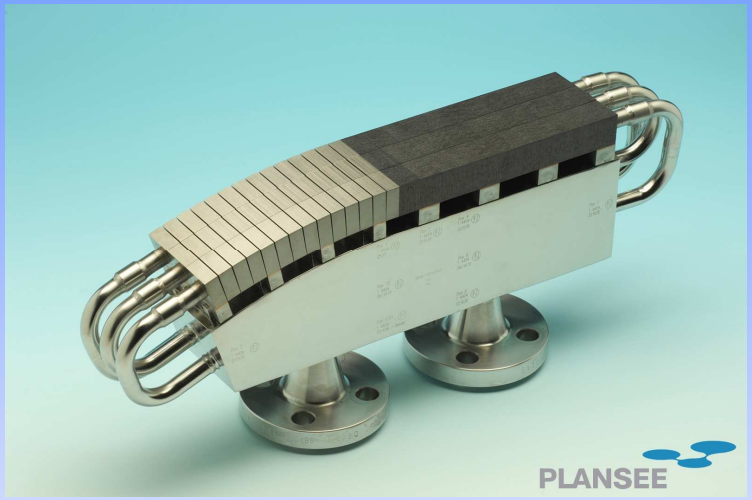

Full monoblock version

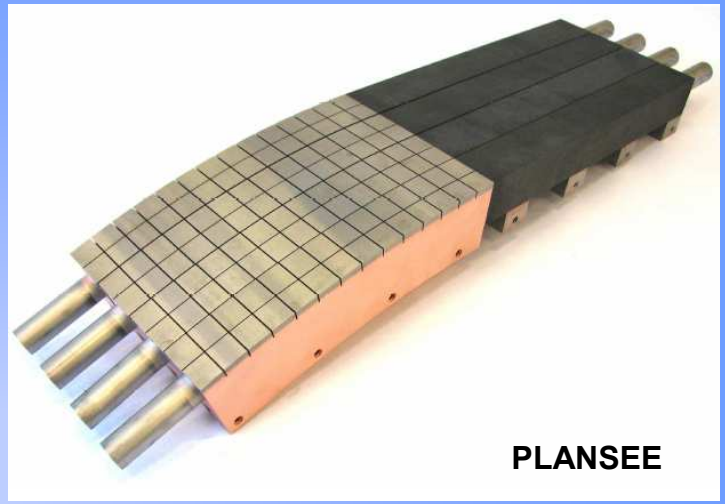

Mono-flat tile version

The companies involved are: Plansee SE (A) and Ansaldo Ricerche (I)

The selected prototype versions are : full monoblock and mono-flat tile

CFC material: SNECMA NB41

Summary

Summary

The ITER divertor is ready for procurement but it is an experimental component and the operational regimes that will allow its use without risk have to be demonstrated.

EU has performed the R&D necessary for divertor procurement (Inner vertical target, cassette, integration)

- High heat flux component technology is compatible with ITER requirements
- Integration issues have been addressed.

The divertor procurement pre-qualification phase has been initiated. This is aimed at minimizing the manufacturing and operational risks.