FUSION TECHNOLOGY

Annual Report of the Association EURATOM/CEA 2000

Compiled by : Ph. MAGAUD and F. Le VAGUERES

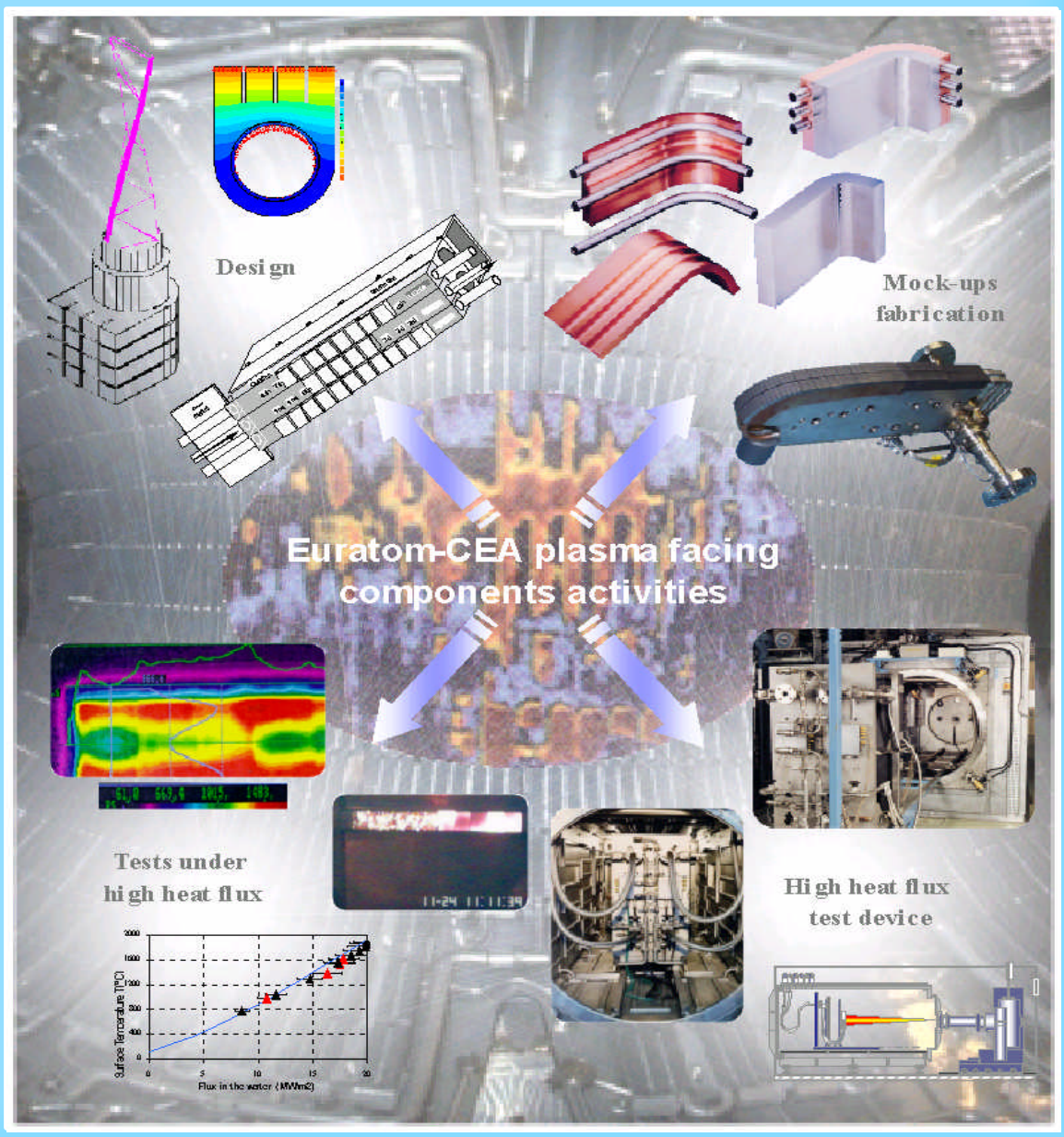

ASSOCIATION CEA/EURATOM
DSM/DRFC
CEA/CADARACHE
13108 Saint-Paul-Lez-Durance (France)

CONTENTS

Vessel/Mechanical structure

Assembly & Maintenance

Magnet Structure

Tritium Breeding and Materials

Breeding Blanket

Water Cooled Lithium Lead (WCLL) Blanket

Helium Cooled Pebble Bed (HCPB) Blanket

Structural Materials development

Advanced materials

Reduced Activation Ferritic Martensitic (RAFM) Steels

Neutron Source

Safety and Environment

System Studies

Power Plant Conceptual Studies (PPCS)

Socio-Economics Studies

Vessel/In Vessel

Plasma Facing Components

Vessel/ Mechanical Structure

Assembly and Maintenance

Tritium Breeding and Materials

Breeding Blanket

Materials Development

Structural Materials

Nuclear Data

Fuel Cycle

Safety and Environment

System Studies

INERTIAL CONFINEMENT FUSION PROGRAMME 399

TW0-TRP-1.1

Task Title : SAFETY AND ENVIRONMENTAL REQUIREMENTS

INTRODUCTION

The purpose is to establish the design requirements for structures, systems and components imposed when taking into account the safety concerns for the operation of a magnetic fusion facility.

The safety assessment process allows to identify the potential hazards that may arise from the operation of the facility and consequently to account for these hazards in the design process.

The safety requirements for a fusion facility are :

(a) To protect the public and the environment against radiological hazards.

(b) To protect the site workers against radiation exposure that must be maintained As Low As Reasonably Achievable (ALARA).

(c) To take measures to prevent accidents and to mitigate their consequences should they occur.

(d) To avoid the need for public evacuation what may be the accident.

(e) To minimise the amount of fusion facility waste.

2000 ACTIVITIES

The safety approach is based on the identification of the potential hazards which are directly related to radioactive materials and which could lead to radiological consequences if no protection was defined.

The identification of the residual hazards is performed in term of probability of the initiating event and in term of gravity for the radioactive consequences of this event.

The acceptable limits for the couple consequence/ probability are defined by the safety regulators.

Meeting those safety limits is possible through appropriate design measures and the demonstration is performed through the safety analysis.

The safety analysis is performed with a deterministic safety approach. Probabilistic methods are used in addition to the deterministic approach.

The deterministic approach is schematised hereafter:

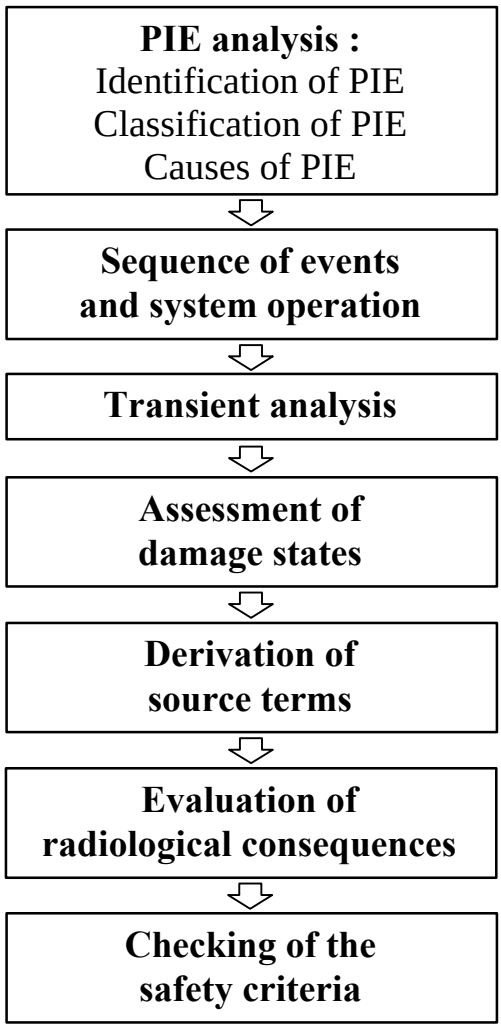

Each Postulated Initiating Events (PIE) should be assigned to one of the following categories:

- LOCA : Loss Of Coolant Accident.
- LOVA : Loss Of Vacuum Accident.
- LOFA : Loss Of Flow Accident.
- Magnet transient (arcing, quench, coil displacement, magnet missile).
- Transient overpower.
- Plasma disruptions (including vertical displacement events and runaway electrons).
- Initiating events in the tritium plant.
- Initiating events in the auxiliary systems (e.g. neutral beams, radio frequency, pumping, fuelling).
- Initiating events in balance of plant systems (e.g. loss of off-site power).
- Operator errors.
- External events.

According to the deterministic safety approach the design is based on the principles of prevention and control of accidents (defence in depth concept). The defence in depth concept is applied to all safety activities, whether organisational, behavioural or design related, to ensure that they are subject to overlapping provisions, so that if a failure should occur, it would be detected and then compensated for or corrected by appropriate measures. It is generally structured in five levels:

LEVEL 1	**Prevention of deviations from normal operation and system failures thanks to:** - a conservative design, - a high quality in construction, - a high quality in operation. This requires that the plant be soundly and conservatively designed, constructed, maintained and operated in accordance with appropriate quality levels and engineering practices, such as the use of redundancy, independence and diversity.
LEVEL 2	**Control of deviations from normal operation and detection of failures thanks to:** - control, limiting and protection systems, - other surveillance features. in order to prevent anticipated operational occurrences from escalating to accident conditions.
LEVEL 3	**Control of accidents within the design basis thanks to:** - engineered safety features, - adequate accident procedures. For the third level of defence, it is assumed that, although very unlikely, the escalation of certain Anticipated Operational Occurrences (AOO) or Postulated Initiating Events (PIEs) may not be arrested by a preceding level and a more serious event may develop. These unlikely events are anticipated in the design basis for the plant, and inherent safety features, fail-safe design, additional equipment and procedures are provided to control their consequences and to achieve stable and acceptable conditions following such events. This requires engineered safety features to be provided that are capable of leading the plant first to a controlled state, and subsequently to a safe shutdown state, and maintaining at least one barrier for the confinement of radioactive material.
LEVEL 4	**Control of severe conditions thanks to:** - complementary measures, - an appropriate accident management. This level includes: - the prevention of accident progression, - the mitigation of the consequences of severe accidents. The aim of the fourth level of defence is to address severe accidents in which the design basis may have been exceeded and to ensure that radioactive releases are kept as low as practicable. The most important objective of this level is the protection of the confinement function.
LEVEL 5	**Mitigation of radiological consequences of significant releases of radioactive materials thanks to:** - an off-site emergency response.

The first four levels are oriented towards the protection of barriers and mitigation of releases. The last relates to off-site emergency response to further protect the public.

The levels are successive, and each level envelops the levels below. Depending on the hazards identified safety case for the nuclear facility, the number of levels may be less than five.

CONCLUSIONS

The safety requirements are established. This work is a contribution to the General Design Requirements Document, in the frame of the phase 1 of the Power Plant Conceptual Study Programme.

REFERENCES

Power Plant Conceptual Study – General Design Requirements document.

REPORTS AND PUBLICATIONS

Girard et al. , "Power Plant Conceptual Studies Phase 1: requirements definition" , CEA report DER/SERSI/LEFS 00/5016.

TASK LEADER

Pierre SARDAIN

DEN/DER/SERI/LFEA
CEA Cadarache
13108 St Paul Lez Durance Cedex

Tél. : 33 4 42 25 37 59
Fax : 33 4 42 25 36 35

E-mail : pierre.sardain@cea.fr

TW0-TRP-2.4

Task Title : ECONOMIC AND OPERATIONAL REQUIREMENTS

INTRODUCTION

The objective is to define operational requirements of a magnetic fusion facility. A target for availability is to exceed 70% overall with less than half of this due to unplanned unavailability. By comparison with the development of other energy sources, particularly fission, this target is unlikely to be met by a first of a kind plant and may have to be relaxed during the conceptual design.

2000 ACTIVITIES

The reactor availability can be further broken down into:

- the planned unavailability defined as follows:

  * short periods of non-availability due to regular maintenance, test and inspection,

  * long periods of non-availability due to periodic general inspection, major repairs or replacement of large components.

  the fortuitous unavailability as a consequence of component failures : shutdown or failure of a safety related function, unexpected operation of a function resulting in the non-availability of the installation, non-availability of the reactor due to safety regulatory considerations.

Tables 1 and 2 show a short review of nuclear industry reliability and availability targets with reference to:

- the European Utility Requirements (EUR) for LWR Nuclear Power Plant,

- the ANSTO (Australian Nuclear Science and Technology Organisation) Replacement Research Reactor.

Reliability and availability targets can be defined as follows:

ASSUMPTIONS

In order to propose availability targets, it is necessary to define the duration of the outages:

Assumption 1: Short planned outage

Short planned outage concern regular maintenance, test and inspection.

Duration of Short planned outage about 30 days per period of one year.

Assumption 2: Major Plant Outage

Major plant outage concern periodic general inspection, major repairs or replacement of large components.

We make the assumption that high heat flux component replacement such as blanket modules and divertor segments will be replaced during major plant outage.

Duration of Major Plant Outage about 365 days over any period of 6 years.

Assumption 3: Unplanned Outages

Unplanned outages concern unplanned Automatic Plasma Shutdown and all other unplanned events.

Duration of Unplanned Outage about 20 days per period of one year.

AVAILABILITY TARGETS

Planned Availability target Ap:

Taking into account assumptions 1 and 2, planned unavailability duration can be evaluated: 515 days during a period of 6 years (365 + 5 x 30).

We can so evaluate planned unavailability percentage ~ 23.5 % (515/365*6).

So, Planned Availability target A_p ~ 76.5 %.

Fortuitous Availability target A_F:

Taking into account assumption 3, fortuitous unavailability duration: 20 days per year.

We can so evaluate fortuitous unavailability percentage ~ 5.5 % (20/365).

So, Fortuitous Availability target A_F ~ 94.5 %.

Overall Availability target A:

$A = A_P \times A_F$
A ~ 72 %
A ~ 86 %
(without taking into account Major Plant Outage each 6 years)

Table 1

	Fission Power Plant		**Research Reactor Ex: ANSTO**	**Fusion Power Plant**	
	Present	**Targets EUR for LWR**	**Targets**	**Targets EUR for NFPP**	**Targets For PPCS**
Overall availability of the Plant taking into account: - Planned unavailability - Fortuitous unavailability **$A = A_P \times A_F$**	A ~ 66% in the 80' A ~ 78% in the 90'	A > 87% per year Planned Availability A_P~ 88% $A_p \sim 100\% - \left[\frac{25\times10+180}{365\times10}\right]\%$ Fortuitous Availability A_F~ 99% (*) $A_F \sim 100\% - \left[\frac{5\times10}{365\times10}\right]\%$	A ~ 83% per year over a 4-year 4-month cycle	A = Not Defined	A ~ 72% per year Planned Availability A_P~ 76.5% $A_p \sim 100\% - \left[\frac{30\times5+365}{365\times6}\right]\%$ Fortuitous Availability A_F~ 94.5% (**) $A_F \sim 100\% - \left[\frac{20}{365}\right]\%$
Overall availability of the Plant taking into account: - Planned unavailability **(without taking into account the Major Plant Outage)** - Fortuitous unavailability **$A = A_P \times A_F$**		A ~ 92% per year Planned Availability A_P~ 93% $A_p \sim 100\% - \left[\frac{25}{365}\right]\%$ Fortuitous Availability A_F~ 99%(*)	**A ~ 88% per year over a 4-year 4-month cycle**	A ~ 80% per year Planned Availability A_P~ 86% $A_p \sim 100\% - \left[\frac{50}{365}\right]\%$ Fortuitous Availability A_F~ 93% $A_F \sim 100\% - \left[\frac{12+11}{365}\right]\%$	A ~ 86% per year Planned Availability A_P~ 92% $A_p \sim 100\% - \left[\frac{30}{365}\right]\%$ Fortuitous Availability A_F~94.5%(**)

Table 2

	Fission Power Plant		**Research Reactor Ex: ANSTO**	**Fusion Power Plant**	
	Present	**Targets EUR for LWR**	**Targets**	**Targets EUR for NFPP**	**Targets For PPCS**
Planned unavailability: Planned Availability **A_P**		**Average refuelling and maintenance outage < 25 days/year** **Average refuelling < 17 days/year** **Major plant outage < 180 days/year each 10 years**		**Average maintenance and module replacement outage < 50 days/year** **Major plant outage < Not Defined days/year each 10 years**	**Average maintenance < 30 days/year** **Major plant outage < 365 days/year each 6 years**
Fortuitous unavailability: Fortuitous Availability **A_F**		**Frequency of unplanned automatic scram < 1 per 7000 hours critical** **Unplanned Outage time < 5 days/year**		**Frequency of Unplanned Automatic Plasma Shutdown 4 per 7000 hours period (with no more than 3 day-production loss during each one)** **Unplanned Automatic Plasma Shutdown time < 12 days/year** Unplanned Outage time (for other events) < 11 days/year	**Global Unplanned Outage time # 20 days/year**

CONCLUSIONS

The operational requirements are established. This work is a contribution to the General Design Requirements Document, in the frame of the phase 1 of the Power Plant Conceptual Study Programme.

REFERENCES

Power Plant Conceptual Study – General Design Requirements document.

REPORTS AND PUBLICATIONS

Girard et al. , "Power Plant Conceptual Studies Phase 1: requirements definition" , CEA report DER/SERSI/LEFS 00/5016.

TASK LEADER

Pierre SARDAIN

DEN/DER/SERI/LFEA
CEA Cadarache
13108 St Paul Lez Durance Cedex

Tél. : 33 4 42 25 37 59
Fax : 33 4 42 25 36 35

E-mail : pierre.sardain@cea.fr

TW0-TRP-2.5

Task Title : SUPPLY REQUIREMENTS

INTRODUCTION

The objective is to define supply requirements of a magnetic fusion facility.

2000 ACTIVITIES

The following operating states shall be accounted for in the design.

SHUTDOWN FOR BLANKET/DIVERTOR REPLACEMENT

In this case the Vacuum Vessel ports are opened, the remote handling tools are active and the boundaries of the first confinement are well beyond the Vacuum Vessel and limited to the working areas located behind the magnets.

The decay heat has to be removed by the primary circuits which are not under maintenance. Those circuits are not necessarily at the nominal conditions (flow, pressure and temperature).

COLD SHUTDOWN

This state can be separated in two cases :

- cold shutdown for repair ; in this case the circuits are at low pressure and the temperature are between 10°c and 70°c . The Vacuum Vessel is closed while the Cryostat can be accessed.

- normal cold shutdown : this state is the first state before start up and also the final state when some components are failed and need maintenance. The cooling loops can be pressurized (~ 20 bars) and the temperature is controlled by a minimum flow in each loops. The primary loops are solid (single phase) there is no vapor in the pressurizer.

INTERMEDIATE STATES

These intermediate states are those reached between cold and hot shutdown, they are of two types:

- single phase intermediate state (when there is no vapor in the pressurizer),

- double phase intermediate state (once the vapor dome is formed in the pressurizer)

In the second case the circuit is less sensitive to pressure variations which can be controlled by the pressurizer valves.

HOT SHUTDOWN

The nominal values for the cooling loops are reached in this case.

The energy is provided by the decay heat and the pumps rotation and is removed by the secondary circuit through the atmosphere or in the condenser.

During the normal operation of the reactor a certain number of anticipated transients are defined in order to comply with the environment constraint of the facility.

OPERATIONAL TRANSIENTS DUE TO EXTERNAL CAUSES

The Fusion Power Plants shall be capable of withstanding a set of standard normal network faults such as: short circuits, oscillations, voltage dips, voltage collapses, etc…while staying connected to the transmission network.

- In case of a *turbine trip*, the design should make possible a normal shutdown without emergency plasma shutdown nor actuation of safety valves.

- In the case of *a major network fault*, the Fusion Power Plant shall be capable of tripping to house load and to stay in a stable operation at this level of load. to operate all the auxiliary equipments of the plant . In particular the unit must be capable of supplying the power needed by the in-house consumers, such as cryogenic systems and cooling systems, superconducting field coils and other reactive power consuming equipment and to remain stable.In this case the operation of the plant becomes manual, in order to stay in automatic configuration the power has to be maintained at a higher value (> 20%), the turbine disconnected and consequently the power removed either by the condenser or in a dedicated circuit (turbine by-pass system).

It can be noted that the in-house energy required to run the plant - though it not directly an Operation Target - is an important economical factor to be considered.

As for example it corresponds to about 5% of the gross electrical power for a 1,300 MW(e) PWR Fission Plant. This is probably a challenging target if set for a Fusion Power Plant.

This means that the efficiency of the conversion cycle of a Fusion Power Plant would have to be improved, as much as possible, to compensate for it, and also to compensate for the very likely higher plant capital cost.

This would allow Fusion Power Plants to have specific capital cost per installed net kW(e), not too far from that of existing fission plants.

OPERATIONAL TRANSIENTS DUE TO INTERNAL CAUSES

These transients are primarily those related to the normal operation of the plant from the cold shutdown to the full power. The design of the Fusion Power Plant should provide *detailed procedures* in order to avoid accidental situations during those phases where human actions are dominating.

Faults on auxiliary equipments can necessitate a power reduction or a complete normal shutdown of the reactor.

Faults on the main equipments to remove and produce energy (turbine, condenser, generator) can lead either to a complete shutdown or operation with by-pass of the turbine.

Assuming that the Fusion Power Plant development and market introduction are supposed to occur in a context of competition with more mature energy sources, we can consider that fusion plant shall not be relied on, by Utilities, to provide a high manoeuvring capability.

This means that manoeuvring capabilities shall not be a high priority for the first generation of commercial Fusion Power Plants. Nevertheless Fusion Power Plants will have to deal with set a constraints, imposed by the connection to the grid.

Therefore:

- The first generation of Fusion Power Plants shall not be required to offer automatic control capabilities.

- The Fusion Power Plants shall be able to operate, according to a scheduled load variation programme, at different loads between 30 % and 110% of the plant net rated load. This would be limited to short periods, up to (TBD) whose frequency of occurrence would be (TBD).

- The Fusion Power Plants would be optimised to aim at the following operational targets :

➢ The starting time and the loading time after a plant shutdown must be as low as reasonably achievable. Two cases must be considered:

➢ The restart from a "hot shutdown" that is the situation after a plant shutdown during which the major plant systems (plasma vessel, fuel system, the cryogenic system and TFC power supplies), are kept in the normal operating conditions (vacuum level, temperatures, coil currents),

➢ The restart from a "cold shutdown" that is the situation after a plant shutdown during which one, or several, major plant systems are not kept in nominal operating conditions, due to major failures, important repair or extensive inspection work, and shall be reconditioned prior to restart (vacuum chamber baking and cleaning, vacuum pumping, superconducting magnet cooling down etc).

➢ These start-up and loading times must be consistent with the number of scheduled and unscheduled shutdowns/annum, in each group, and the plant availability overall availability targets set before.

CONCLUSIONS

The operational requirements are established. This work is a contribution to the General Design Requirements Document, in the frame of the phase 1 of the Power Plant Conceptual Study Programme.

REFERENCES

Power Plant Conceptual Study – General Design Requirements document.

REPORTS AND PUBLICATIONS

Girard et al. , "Power Plant Conceptual Studies Phase 1: requirements definition" , CEA report DER/SERSI/LEFS 00/5016.

TASK LEADER

Pierre SARDAIN

DEN/DER/SERI/LFEA
CEA Cadarache
13108 St Paul Lez Durance Cedex

Tél. : 33 4 42 25 37 59
Fax : 33 4 42 25 36 35

E-mail : pierre.sardain@cea.fr

TW0-TRP-3D4

Task Title : REACTOR INTEGRATION

INTRODUCTION

Within the scope of the fusion reactor studies, the DER assessed the dimensioning of energy evacuation systems and general architecture of a fusion reactor for generating power. The action's aim is to provide the DER with the fusion reactor dimensioning means by relying on methods and tools available for fission reactors. These are COPERNIC for everything regarding dimensioning of circuits and systems, and the RENDIPE code for calculation of efficiency that will be integrated into COPERNIC in the final stages.

2000 ACTIVITIES

DESIGNING METHOD

The definition of the operational point of any reactor and the dimensioning of its components require the intervention of several fields, which strongly interact. The feasibility of a design responding to economic objectives and safety constraints quickly goes against the complex nature of the reactor.

In order to respond to the innovative design study objectives, it is therefore necessary to use a tool that may take into account the main phenomena that intervene in reactor design. This tool, which is currently being developed at the DER/SERI, is named COPERNIC for "**CO**de de **P**rédimensionnement et d'**E**valuation des **R**éacteurs i**N**novants par la méthode d'**I**ngénieries **C**oncurrentes" (pre-dimensioning and assessment code for innovative reactors using the concurrent engineering method). This code is being developed for the PWR and gas reactors.

GENERAL DESCRIPTION

The objectives of the COPERNIC code are:

- to aid the choice of design options for new designs,
- to quickly assess the consequences of modifications of the operational point or geometric data, on the general architecture of a boiler and on the cost,
- to give the first sets of data required by the calculation codes used for more in-depth studies,
- to make a reactor database available,
- to assess innovative reactor design options suggested in publication.

The code's constraints are:

- it must be a simple design tool in order to be easily used and be adaptable,
- it offers the traceability of information contained within the code.

The calculation environment is Excel 2000 with a worksheet for each type of reactor.

Each worksheet is linked with different tools written in VisualBasic (Vba) or DLL (Dynamic Link Library) produced by FORTRAN programs.

A first adaptation of COPERNIC has enabled modelling of the blanket cooling circuit using the «Water Cooled Lithium Lead (WCLL)» design. The reference reactor used for description of the general architecture is the SEAFP.

The main input data are those of the operating point and the general architecture (core, pumps, steam generators, pressuriser). The main output values are the size of the components with few synthetic features as the specific mass, the thermal inertia, the level of natural convection, ….

The figure 1 shows a schema of the "water cooling blanket system". On this schema, it possible to modify directly four parameters (primary pressure, secondary pressure, saturation margin and the difference of temperature between the primary and secondary side). The consequences of the modification are immediately updated on the graph.

A parametric study of the containment dimensioning is carried out as a function of its maximum allowable pressure and the loop configuration. In the case of the WCLL in the SEAFP study, the containment volume varies from 10,000 to 100,000 m3 according to the maximum allowable pressure of 5 bar or 1.5 bar absolute. The increasing number of independent loops significantly reduces the containment volume.

ENERGY CONVERSION

Modelling of the energy conversion is obtained using the RENDIPE code ("RENDement d'une Installation de Production d'Electricité", electricity production installation efficiency). This code is written in FORTRAN and simulates the Rankine cycles. It was developed and qualified for the Sodium Reactor and the PWR

The RENDIPE code is being modified at the input and output levels to be called by COPERNIC in the DLL format.

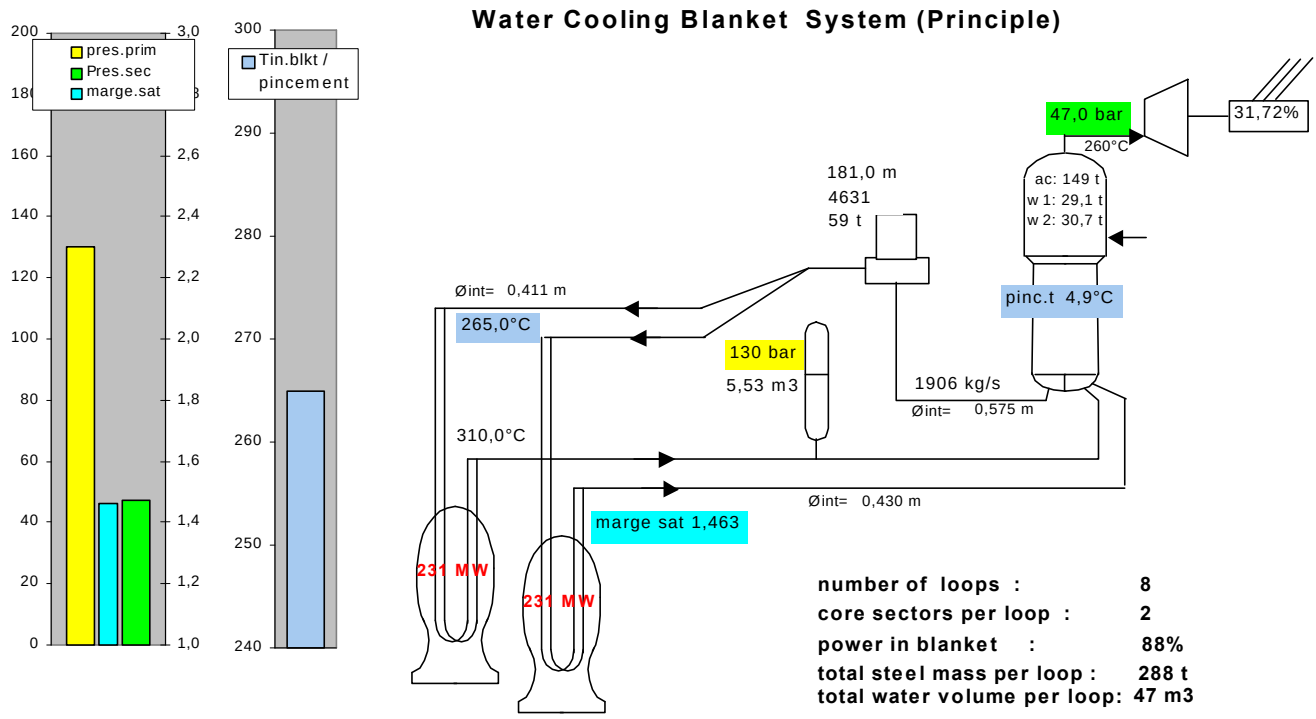

Figure 1 : Schema of the water cooling blanket system

THERMODYNAMIC CYCLE STUDY

The study of energy conversion is carried out with the RENDIPE code waiting its integration within COPERNIC. The data is generated by the reference primary circuit. The fusion reactor specificity is to have two primary circuits available:

- The blanket circuit with a 3,700 MW power and input and output temperatures of 265 and 310°C.

- The divertor circuit with 500 MW power and input and output temperatures of 180 and 223°C.

The blanket circuit is used to produce the vapour through a boiler type steam generator at a pressure of 47 bar, that is to say, a vapour temperature of 260°C.

The researched objective is to find the thermodynamic cycle that enables the maximum net electric power to be obtained.

This study is focused around two cases:

- only the blanket circuit power is used, the power extracted from the divertor is released into the environment: « without divertor » case,

- the power extracted from the divertor is used to partly reheat the supply water instead of turbine extractions: « with divertor » case.

Case of the cycle without divertor

In this case, the gross installation power is 1236.8 MW. The gross efficiency (with respect to the blanket power) is 33.16%. This efficiency is near to standard PWR.

The primary pump electric power must be subtracted from the gross power (42.3 MW) and that of the auxiliaries (274.6 MW that is to say 250 MW for the reactor requirements and 24.6 MW for divertor circuit pump electric power). The net power is therefore 919.9 MW. In these conditions, the net efficiency with respect to the blanket power (3,700 MW) is 24.86 %. With respect to the reactor's thermal power (4,200 MW), the net efficiency is therefore 21.90 %.

Case of the cycle with divertor

In this case the installation's gross power is 1347.2 MW. The gross efficiency (with respect to the blanket power) is 31.70 %. This efficiency is lower than that of standard PWR, as the supply water temperature arriving from the water station is much lower than the previous case, in order to enable its reheating using the divertor extracted heat. The primary pump electric power for the blankets and divertor (70 MW) and that of the auxiliaries (250 MW) must be subtracted from the gross power. The net power is therefore 1026.8 MW, that is to say, a net efficiency with respect to the reactor thermal power of 24.45 %.

Results analysis

The net efficiency of the fusion reactor is lower than those of the PWR's one. To improve the efficiency it is necessary to optimise the thermal sources. Instead of using divertor power to reheat the supply water, vapour production at low pressure may be envisaged (up to 9 bar) and mixed with vapour immediately downstream of the superheater between the HP and LP bodies to pass through the turbine in the LP bodies (cf. fig.2). This option should improve the installation's efficiency, but may not be calculated for now with the RENDIPE code possibilities.

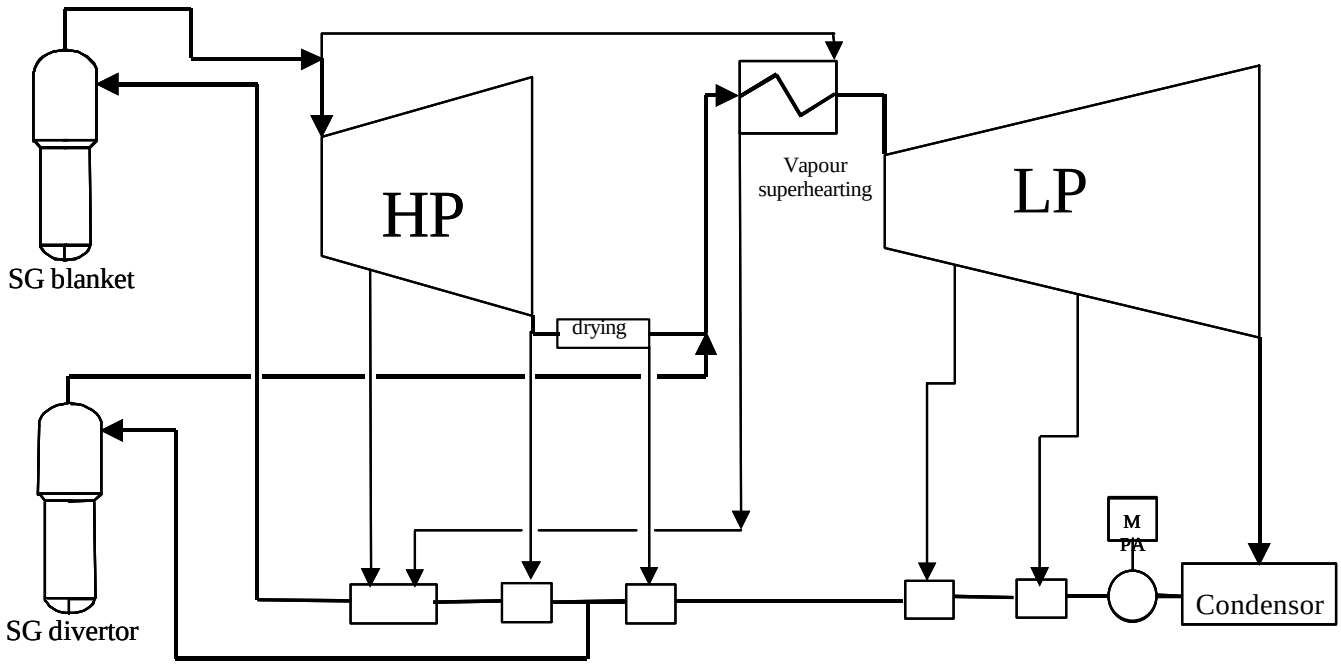

Figure 2 : Suggestion of a thermodynamic cycle

CONCLUSION

COPERNIC is a pre-dimensioning tool, one of the objectives of which is to help reactor design. This tool, which is a work method, is being developed and perfectly adapted to the study of fusion reactor definition for generating power. A first version has just been developed for a « Water Cooled Lithium Lead (WCLL) » type reactor, the efficiency calculations for energy conversion were performed using the RENDIPE code, which will be integrated into COPERNIC in the final stages.

A parametric study of the containment dimensioning is carried out as a function of its maximum allowable pressure and the loop configuration. In the case of the WCLL, the containment volume varies quickly according to the maximum allowable pressure of 5 bar or 1.5 bar absolute. The increasing number of independent loops significantly reduces the containment volume.

The net efficiency for the installation's energy conversion is not very high (lower than 25%) due to:

- High reactor electricity requirements,
- A significant portion of the power given off in the divertor and its poor energetic quality.

An improvement of the energy conversion is suggested by producing vapour at low pressure and passing it through the turbine in the turbine's LP body

This first modelling of a fusion reactor requires further work in order to:

- simulate the divertor circuit,
- integrate RENDIPE into COPERNIC,
- improve blanket simulation.

An adaptation of COPERNIC may be planned in order to simulate fusion reactor with other types of coolant.

REFERENCE

Pre-dimensioning study for a power generating fusion reactor. NT DER/SERSI/LECC 00/4064. Guy-Marie GAUTIER

TASK LEADER

Guy-Marie GAUTIER

DEN/DER/SERI/LFEA
CEA Cadarache
13108 St Paul Lez Durance Cedex

Tél. : 33 4 42 25 48 24
Fax : 33 4 42 25 36 35

E-mail : guy-marie.gautier@cea.fr

TW0-TRP-4D5

Task Title : HIGH HEAT FLUX COMPONENTS

INTRODUCTION

In 1999, preparatory work was carried out in the EU to prepare a fusion Power Plant Conceptual Study (PPCS) started in 2000. During the preparatory work (first stage studies), high heat flux components such as the divertor were found to be among the critical components with severe lifetime limitations that may condition the availability of a fusion power plant and thus strongly impact on its economic performance.

Due to the lifetime related uncertainties, parametric sensitivity analyses were required for a wide range of High Heat Flux Component (HHFC) concepts. These analyses were based on thermo-mechanical evaluation weakly coupled with thermo-hydraulics phenomena. The objective of HHFC second stage studies (subtask TRP4D5) is to develop numerical tools for a detailed HHFC evaluation procedure. These models should improve previous evaluations, by coupling thermo-mechanical and thermo-hydraulic phenomena (to simulate Post Critical Heat Flux behavior for instance) and accounting for plasticity, creep and irradiation in stress-strain fields and damage computation.

2000 ACTIVITIES

SECOND STAGE STUDIES FOR HHFC

Second stage studies proposed for HHFC are decomposed in two main topics:

Topic 1: Design optimization

The goal is to provide a numerical tool for design optimization of a HHFC. This second stage evaluation will be based on a more detailed description coupling thermo-hydraulic and thermo-mechanical phenomena, in order to be able to describe steady state and transient conditions (like nominal and accidental for instance). This design optimization tool will be used to choose main characteristics of the high heat flux component technology like design, material, coolant type and flowing conditions.

Topic 2: Life Time Assessment

The aim is to improve stress-strain computation and damage evaluation, in order to rationalize structural integrity assessment of Topic 1. Stress and strain computations will be improved by using an inelastic approach for the mechanical model (see paragraph 3).

Damage evaluation can be improved by using models based on the physical mechanism (local approach) instead of a standard engineering approach based on global conventional parameters. Topic 2 evaluations will be carried out only on more interesting concepts (selected with numerical tools of topic 1 for instance).

HHFC MODELS FOR MECHANICAL LOADING EVALUATION

Stress and strain evaluation in the HHFC can be achieved with the following decomposition: a thermal-hydraulic model (coolant fluid) strongly coupled with a thermal model (structural parts) and a mechanical model using temperature distribution as input for an explicit computation of stress and strain fields.

For the thermal-hydraulic model, a 3D two-phase flow formulation is needed to enable a good description of the coolant fluid. The thermal model has to take into account 3D conduction within solid parts, and thermal flux extraction at the solid-fluid interface. A coupling effect between the two models has to be introduced via the heat-transfer coefficient depending on the thermal-hydraulics condition at the fluid-solid interface.

The mechanical model will use the temperature distribution in solids as input to compute the thermo-mechanical load. The coolant pressure will be introduced as external forces on the fluid-solid interface. An elasto-visco-plastic formulation is needed to best estimate the stress and strain fields at high temperature. Such a formulation enables to compute:

- time-independent strain under thermo-mechanical loading: this strain, occurring in transient stages, yields thermo-mechanical stresses. An elasto-plastic formulation taking into account monotonous and cyclic hardening of materials will lead to a reasonable estimation of time-independent thermo-mechanical stresses,

- time dependant strains at high temperature (thermal creep): this strain, occurring at high temperature under dwell loads, will accommodate thermo-mechanical stresses, with relaxation for thermal stresses and redistribution of mechanical stresses. A viscous formulation is needed to take into account these time dependant strains.

Irradiation effect should also be included in the mechanical analysis, because the plasma facing material is submitted to high neutron damage. This effect will be introduced via a flux dependent strain (irradiation creep and swelling) and thermo-mechanical property variations under irradiation.

Irradiation creep and swelling will not exert the same influence on stresses, the former will mainly relax thermo-mechanical stresses while the latter will rather amplify stresses.

A specific aspect of the mechanical model for a HHFC concerns the joint on the interface between the plasma facing material and the structural material. Actually, this interface represents a strong discontinuity of material properties. It must be carefully integrated in a Finite Element model to avoid the stress field at the interface to be singular. Therefore, a specific interface model is required to best estimate stress and strain fields around the material discontinuity. This model should be based on a detailed description of the material around the interface, accounting for chemical composition variation and local crystallographic structure. Homogenization and micro-mechanic approaches could probably help to define a physically based interface model.

STRUCTURAL INTEGRITY ASSESSMENT

As we have high temperature conditions, the proposed lifetime assessment methodology will be based on the design rules RB3100 of the RCC-MR code. According to these rules, the loss of structural integrity can be due to:

- RB3111 P damage type: under monotonously increasing loading or under constant loading,
- RB3112 S damage type: under cyclic loading,
- RB3113 Buckling,
- RB3114 Fast instability.

The buckling damage mechanism concerns only a thin-walled component, so it can be neglected for HHFC.

Irradiation effects are not included in the RCC-MR code but they are partially taken into account through the fast instability rule in the RCC-M code. Concerning high irradiation levels, where irradiation creep and swelling can occur, a codification work is available in IISDC document. Moreover, the RCC-MX code, currently under preparation, will include irradiation effects. In our case, this effect will be taken into account via the following points:

- consequences of irradiation creep and swelling on stress-strain fields computation,
- consequences of irradiation on material properties,
- irradiation damage mechanisms.

CONCLUSIONS

A methodology for HHFC lifetime assessment was proposed. The literature review showed that previous HHFC evaluation models were mainly based on thermo-mechanical formulation, and that structural integrity criteria could be improved by taking into account creep and irradiation. Models to be used for mechanical loading evaluation were described. The numerical simulation will be based on a thermal-hydraulic model (coolant fluid) strongly coupled with a thermal model (structural parts) and a mechanical model using temperature distribution as input for an explicit computation of stress and strain fields. Concerning structural integrity the methodology based on the RCC-MR code has been detailed.

REPORTS AND PUBLICATIONS

NT/SERSI/LECC/00-4068 B. MICHEL
REMAINING LIFE ASSESSMENT METHODOLOGY FOR HIGH HEAT FLUX COMPONENTS

TASK LEADER

Bruno MICHEL

DER/SERI/LFEA
CEA Cadarache
13108 St Paul Lez Durance Cedex

Tél. : 33 4 42 25 34 73
Fax : 33 4 42 25 36 35

E-mail : bruno.michel@cea.fr

TW0-TRP-4D7

Task Title : ECONOMICS AND OPERATIONAL ANALYSES Maintenance schemes

INTRODUCTION

The Fusion program within the EU, as launch a fusion Power Plant Conceptual Study with the main objective of specifying the characteristics of an attractive and viable D-T power plant in order to define major guidelines for fusion-related R&D in the next decades.

Plant maintenance impact on the availability is a major concern when considering discussion on main options for a commercial fusion power station. There is no project that describes a formal method to take into account maintenance issue during design activities. Major advanced studies dealing with maintenance during pre-design activities have been previously reviewed.

The handling schemes considered to date for the next step machines are not suitable for a fusion reactor. In fact, the proposed handling procedures for the blanket would result in a reactor availability too low.

The scope of this study is to assess Tokamak maintenance schemes, to assess their reactor relevance and to propose guidelines.Scope of 2000 activities is to assess Vacuum Vessel segmentation within the scope of an effective maintenance scheme that meet the requirement of a good power plant availability level. It is assumed, as a reference study case, that the geometry of the vessel is similar to ITER-FEAT design.

We started the assessment considering that module of about 15 tons is a good compromise for the segmentation ratio that prevent from handling too large modules in one hand, and that decrease significantly the total number of modules, compared to ITER-FEAT in the other hand.

2000 ACTIVITIES

PROPOSITION OF A RAIL MOUNTED MODULE MAINTENANCE SCHEME

A *radial mover* transports each module along radial rails through the transfer port and into the vessel where the *in-Vessel module transporter* handles the module to its designated position.

At least one central module, (in front of each RH port duct & at each Toroidal level i.e. 6) is moved by means of the *In-Vessel transporter* to free the space for a *Toroidal mover.* The *In-Vessel Transporter* equipped with an ad-hoc end-effector installs *the Mini-Toroidal mover* that provide handling of the modules along the Toroidal rails. The *Mini-toroidal mover* is driven by a rack-and-pinion mechanism and moves along 2 rails permanently fixed to the In-Vessel. Once at its final position, a module is locked to the toroidal rails such that it can sustain the off-normal electro-magnetic loads and is accurately aligned in both poloidal and toroidal directions.

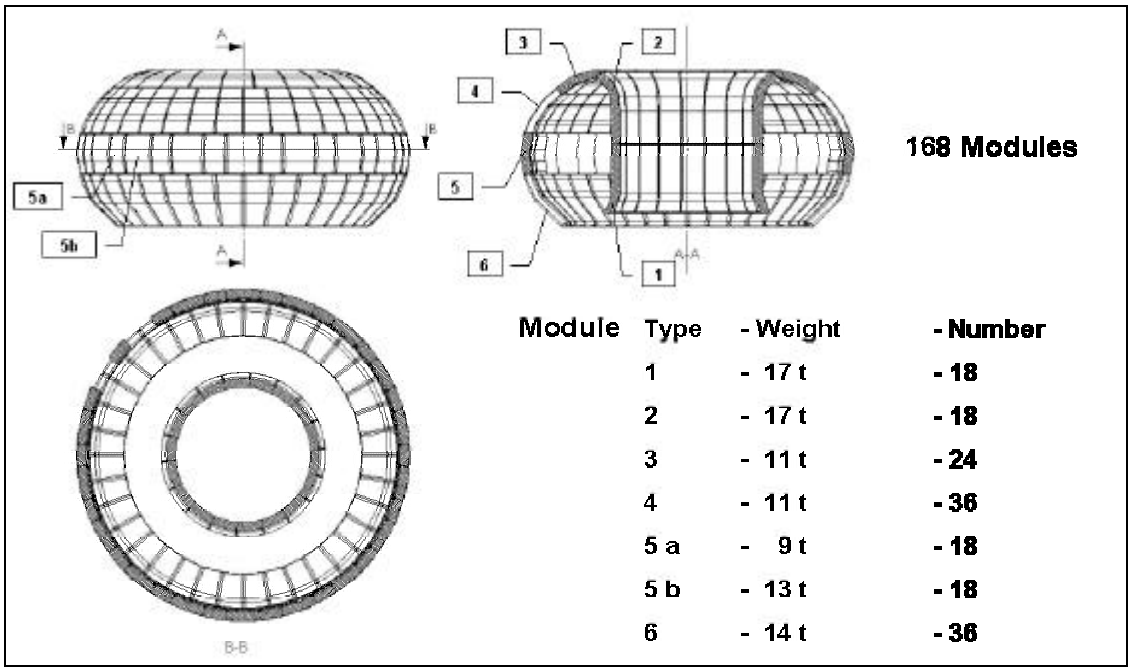

Figure 1 : Poloidal segmentation for rail mounted modules

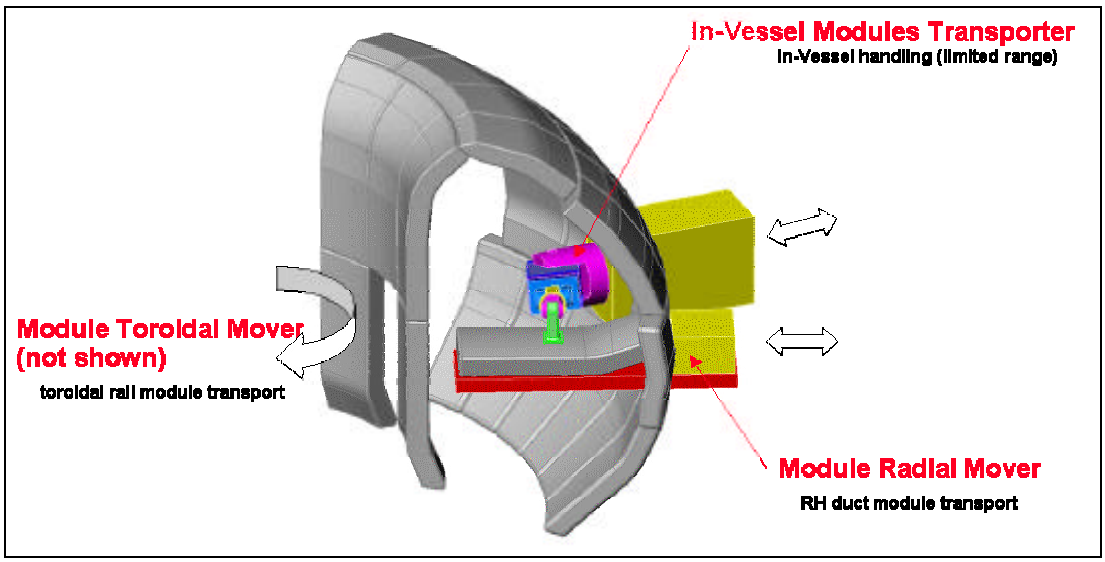

Figure 2 : Rail mounted modules handling devices

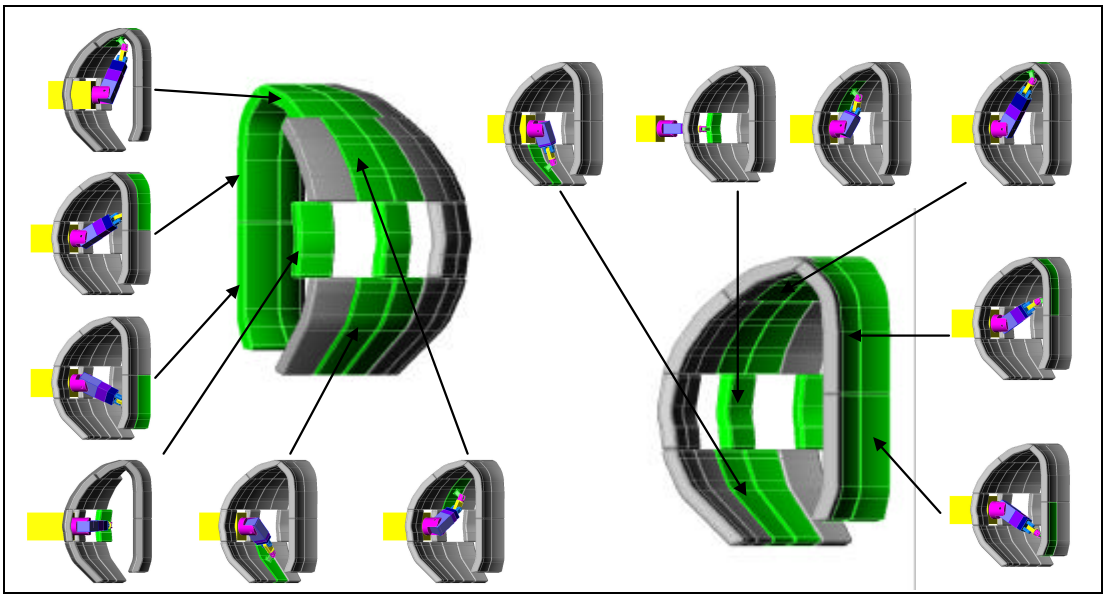

Figure 3 : 60° In Vessel sector module handling

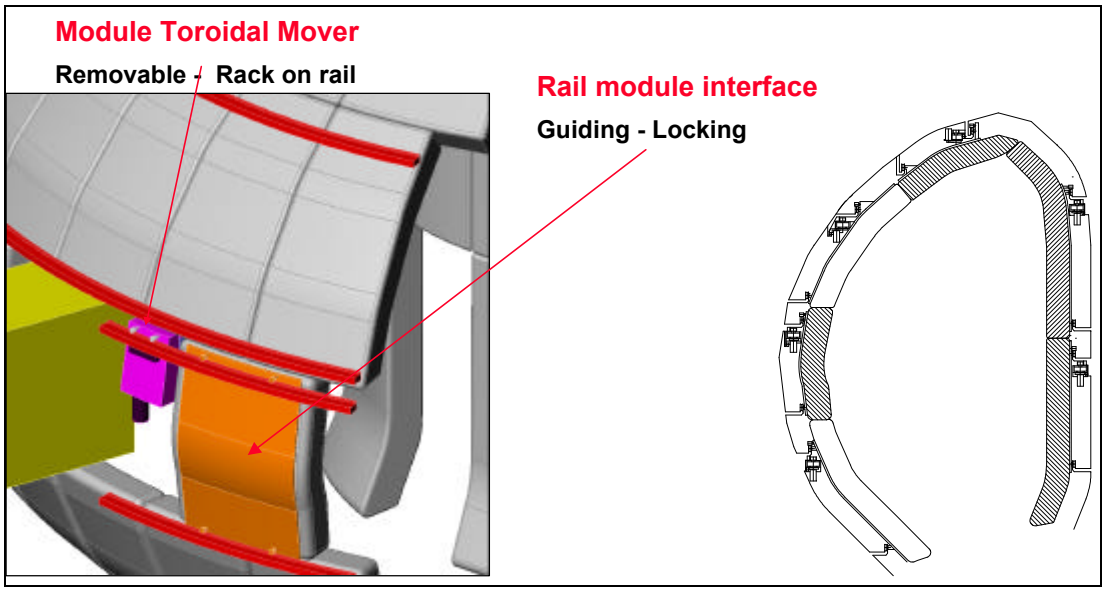

Figure 4 : Rail module toroidal mover

CONCLUSIONS

The proposed alternative on Rail Mounted Modules maintenance scheme appears feasible. A maintenance scheme based on this principle would provide confidence in the future Power Plant design because it'll give benefits from what was learned during ITER design phases.

This proposed maintenance scheme strongly emphasizes the use of parallel operations which is a key parameter to reach the power plant availability.

Module In-vessel handling & duct transfer decoupled.
Module In-Vessel handling & toroidal transport decoupled
Possible use of 6 toroidal transporters in parallel
Does not interfere with divertor cassette maintenance.

Future work to assess maintenance time requires more detailed analysis of the operation involved. We should point out that ITER design parameters strongly affect the maintenance scheme performances. For example, we can expect improvement of the replacement time by using low density material for the modules.

This configuration allows replacement of one third of the blanket modules every year, with an expected maintenance time of three months per year. This has to be compared to the present maintenance time required to replace the full set of blanket of about 2 years.

REFERENCES

[1] S. SHARAFAT & al, Design layout and maintenance of the ARIES-IV tokamak fusion power plant, IEEE 1994.

[2] S. NISHIO & al, The concept of drastically easy maintenance (DREAM) tokamak reactor, Fusion Engineering and Design 25 (1994).

[3] R. Haange (for ITER JCT), Overview of remote-maintenance scenarios for the ITER machine, Fusion Engineering and Design 27 (1995).

[4] E. Tada & al, The blanket and Divertor Maintenance Concept for ITER, 19th symposium on Fusion Technology (1996).

[5] EFFET – FRAMATOME/FIATAVIO, Planned maintenance procedures, Safety and Environmental Assessment of fusion power Long-term programme (SEAL).

[6] S. MALANG, ARIES-RS maintenance approach for high availability, Fusion Engineering and Design 41 (1998).

[7] D. MAISONNIER, In-Vessel maintenance for a Next Step machine, NET-Team (Dec 1998).

[8] Y. ASAOKA & al, Maintenance and safety aspects of the CREST reactor, ISFNT 5 (Sept 1999).

[9] L. Giancarli, M. Ferrari, M. A. Fütterer, S. Malang, Candidate Blanket Concepts for a European Fusion Power Plant Study, ISFNT 5 - Rome (Sept 1999).

[10] D. J. Ward, Impact of Availability and other factors on Fusion Economics, Plant availability programme task 3.3 PPA/3.3/UKAEA/2.

REPORTS

- P.P.A. 3.2 Maintenance of a commercial Fusion Power Station – Review of the possible maintenance schemes, *CEA-DPSA-STR-LAM/99.029.*

- P.P.A. 3.2 Maintenance of a commercial Fusion Power Station ASSESSMENT ON AVAILABILITY-*CEA-DPSA-STR-LAM/99.115.*

- PPCS- ECONOMIC AND OPERATIONAL REQUIREMENTS TRP4-D7 - MAINTENANCE SCHEME - *CEA-DPSA-STR-LAM/00.54.*

TASK LEADER

Jean Pierre FRICONNEAU

DRT/DTSI/SRSI
CEA Fontenay aux Roses
Boîte Postale 6
92265 Fontenay aux Roses Cedex

Tél. : 33 1 46 54 89 66
Fax : 33 1 46 54 75 80

E-mail : jean.pierre.friconneau@cea.fr

SERF2

Task Title : EXTERNALITIES OF FUSION
Accident external costs and sensitivity analysis on the site location

INTRODUCTION

In the scope of the research on fusion reactors and their future application in electricity power generation, socio-economic studies have been performed to evaluate the external costs associated with the fusion fuel cycle. Based on the “ExternE” methodology – developed by the European Commission for the external costs of the different fuel cycles – the externalities of fusion have been assessed in the framework of the Socio-Economic Research on Fusion project of the European Commission and EURATOM associations. First calculations of the external costs associated with environmental and health impacts for fusion power plants have been published in the final report of the SERF 1 study (1997-1998). Further developments have been proposed to improve these estimates in the SERF 2 study (1999-2000). In this study, CEPN was in charge of two topics:

- updating the external costs of a nuclear accident including risk aversion,
- developing a sensitivity analysis of the impacts of routine releases of the fusion power plant according to the location.

2000 ACTIVITIES

ACCIDENT EXTERNAL COSTS

As far as the health and environmental impacts are concerned, one of the interests of the fusion fuel cycle is the limitation of consequences associated with the releases into the environment of a potential accident.

For the calculations of the accident consequences, the power plant concept considered mainly relies on technologies and materials already developed or near to be developed. It is based on reduced activation martensitic stainless steel for the structural materials of the components close to the plasma, a Lithium-lead alloy for Tritium generation and a pressurised water cooling system (Raeder et al. [1]).

For the accident scenario, all the assumptions rely on the safety study SEAFP performed within the EURATOM research programme (Raeder et al. [1]). The accident scenario adopted is a "beyond design basis accident" (BDBA). It is considered that a first event occurs leading to a "design basis accident" scenario, but furthermore some unlikely internal events or event combinations occurs leading to a BDBA scenario.

The most severe scenario considered hereafter is characterised by a major in-vessel LOCA (loss-of-coolant), followed by a radioactivity mobilisation and a failure to close the ultimate radioactivity confinement, and stack release. In that case, the filter efficiency is 99%, except for Tritium, for which no retention is assumed. The releases into the environment is supposed to last 60 hours.

The selected site for the evaluation of the external costs is Lauffen, located in the south-western part of Germany. According to the current safety analyses, the accidental situation considered refers to a release of a few tens of g of ^{3}H. Due to the technical capabilities of the fusion power plant from the safety point of view, the occurrence of such an accident is considered to be well below 10^{-7} per year (Raeder et al. [1]).

Radiological exposures associated with the accident scenario

According to the limited amount of radioactivity released in the environment in case of accident, it appears that the individual early dose for the most exposed population is significantly lower than the intervention level for evacuation as well as than the intervention level for sheltering. Furthermore, the maximum individual chronic exposure is also quite lower than the intervention levels for temporary relocation or permanent resettlement. Although no intervention is requested in case of occurrence of the considered accident scenario, the collective exposures were assessed in the perspective of evaluating the external costs. The calculations led to a cumulated collective dose integrated over 50 years of about 60 man-Sv for the local population (i.e. 100 km around the power plant), and a collective dose of the population located between 100 and 1000 km around the power plant in the range of 130 man-Sv. In this larger area, the average individual dose is by a factor 10 less than the average individual dose of the local population.

Analysis of potential restrictions on agricultural food products

Generally, one of the major sensitive aspects in the case of an accident concerns the restrictions that should be imposed on food trade and consumption due to the activity concentration of the products. Given the limited amount of radioactive materials potentially released in case of occurrence of an accident, the restrictions, if any, should be rather limited to a small area (in the range of 300 km^2), for a short duration (less than a week) and only for a few products (mainly milk and cow meat). According to agricultural data for the area of interest, a maximum of 800,000 L of milk is supposed to be lost, and a temporary storage of about 24 tons of cow meat is envisaged.

These conclusions on food ban, although they have to be considered with caution, are quite important as far as it appears that the reference accident scenario for fusion power plant is not severe enough to lead to significant restrictions for food trade. This element could be quite important in terms of acceptability of the situation.

Evaluation of economic consequences

For the economic valuation of the impacts, three categories of costs have been distinguished for each area: health effect costs, food ban costs, and indirect costs due to health and environmental impacts.

Based on the reference economic values used in external costs studies (Saez et al., [2]), the total external costs of the fusion power plant accident are in the range of 80 millions EUROS. Table 1 details the contribution of each category of costs.

Table 1 : Economic consequences associated with the accident scenario (in EUROS, without discount rate)

Cost category	Local area	Regional area	Local + regional aeras
Health effect	$2.48\ 10^7$	$4.97\ 10^7$	$7.45\ 10^7$
Food bans	$2.61\ 10^5$	-	$2.61\ 10^5$
Indirect costs	$3.3\ 10^6$	-	$3.3\ 10^6$
Total	**$2.84\ 10^7$**	**$4.97\ 10^7$**	**$7.81\ 10^7$**

Integration of risk aversion

The usual approach adopted for evaluating the external costs of accident consists in calculating the expected value of the cost of various accident scenarios. The main criticism of this approach is that there is a discrepancy between the social acceptability of the risk and the average monetary value required for paying compensation to each individual affected by the accident. In this study, the risk aversion of public is integrated on the basis of recent methodological developments, relying on the expected utility approach (Eeckhoudt et al., [3]).

Based on the economic literature related to empirical studies on risk aversion, a baseline value of 2 for the relative risk aversion coefficient has been adopted. Assuming this relative risk aversion factor, the calculations performed for the fusion power plant accident show that the initial external costs of the accident have to be multiplied by a factor equal to 25, instead of higher values suggested in the past in the literature for external costs associated with severe accidents.

Summary of external costs associated with an accident of fusion power plant

According to these different components, the external costs of the fusion accident is in the range of 10^{-5} to 10^{-4} mEURO/kWh while the total external costs for fusion are estimated in the range of a few mEURO/kWh. Table 2 summarises the main results for these external costs with and without taking account of risk aversion.

It should be noted that even with the integration of risk aversion, the external cost associated with accident scenario for fusion power plant still remains quite limited due to the low radiological impacts that would have to support the populations surrounding the power plant if an accident occurred.

Table 2 : Total external costs and normalised external costs associated with the accident scenario

	External costs
Total cost of the accident	*EUROS*
without risk aversion	$7.8\ 10^7$
with risk aversion	$1.95\ 10^9$
Cost of the accident per kWh	*mEURO/kWh*
without risk aversion	$1.2\ 10^{-6}$
with risk aversion	$3\ 10^{-5}$

SENSITIVITY ANALYSIS ON SITE LOCATION

External costs associated with the radiological impacts of routine releases from a fusion power plant were calculated in SERF-1 for one site location (Lauffen, Germany), and without taking account of exposure via ingestion of contaminated foodstuffs [2]. The objective of the present study was to evaluate the sensitivity of the calculations with the site location, taking into account external exposures, inhalation and ingestion pathways.

The fusion plant characteristics considered in this study refer to “Model 2, Argon-Tungsten” [2]. In order to estimate the sensitivity of the results with the site location (meteorological conditions, grid of population around the site, dietary habits and agricultural production), calculations were performed for two site locations. One site is inland (Marcoule, France) considering that the releases occur into the atmosphere and into the Rhône river) and the second site is coastal (Flamanville, France) considering that the releases occur into the atmosphere and into the Channel. Results were also compared with those obtained for the Lauffen site.

Collective doses were calculated for each selected site for different space and time scales – respectively 100 km, 500 km and 3,000 km and 1 year, 50 years and 100,000 years. Table 3 summarises the results in terms of collective doses for the two site locations. Values previously obtained for Lauffen site [2] are also indicated for comparisons.

These results show that the site location does not strongly affect the impacts at the global scale, nor the fact that liquid releases may occur into a river rather than into the marine environment.

This is essentially due to the pre-eminent contribution of gaseous releases as compared with liquid ones. Furthermore, in the long term, the impacts are largely dominated by the global impacts of C-14. For local and short term impacts, results obtained for the different sites remain in the same order of magnitude – a maximum difference of a factor 5 is observed between Flamanville and Marcoule for 1-year integration time.

At the local scale, values calculated for Lauffen were slightly higher (a factor 4) than those calculated for Marcoule. The difference can be attributed to the population densities around the sites. A the global range, the value indicated for Lauffen is about one order of magnitude higher. The difference comes from the fact that the 'global range' considered for Lauffen is dealing with impacts on the world population, while the 'remote' scale associated with Marcoule and Flamanville locations is dealing with impacts at the European scale.

Table 3 : Synthesis of site location sensitivity analysis

Site location		**Collective dose[a)]** in man.Sv.y^{-1}	in man.Sv.TWh^{-1}
Flamanville 'coastal'			
	Local	1.84 10^{-2}	2.80 10^{-3}
	Regional	9.74 10^{-1}	1.48 10^{-1}
	Remote	4.15	6.32 10^{-1}
	Total	***5.14***	***7.82 10^{-1}***
Marcoule 'inland-river'			
	Local	7.83 10^{-2}	1.19 10^{-2}
	Regional	8.52 10^{-1}	1.30 10^{-1}
	Remote	4.53	6.89 10^{-1}
	Total	***5.46***	***8.31 10^{-1}***
Lauffen 'inland-river'			
	Local range	3.01 10^{-1}	4.59 10^{-2}
	Global range	5.36 10^{1}	8.16

[a)] An annual production of electricity of 6,57 TWh is assumed for the plant model

REFERENCES

[1] RAEDER J., et al., Safety and Environment Assessment of Fusion Power, Report of the SEAFP Project, European Commission, EURFUBRU XII-217/95, June 1995.

[2] SAEZ R., et al., Externalities of the fusion fuel cycle: socioeconomic research on fusion, SERF 1997-1998, CIEMAT, Coleccion Documentos Ciemat, 1999.

[3] EECKHOUDT L., SCHIEBER C., SCHNEIDER T., Risk aversion and the external cost of a nuclear accident, Journal of Environmental Management, 58, 109-117, 2000.

REPORTS AND PUBLICATIONS

- Evaluation of radiological and economic consequences associated with an accident of a fusion power plant, T. Schneider, S. Lepicard, R.M.Sáez, H.Cabal, Y.Lechón, D.Ward, T.Hamacher, K.Aquilonius, B.Hallberg and R.Korhonen, SOFT Conference, September 2000, Madrid, Spain.

- Evaluation of radiological and economic consequences associated with an accident of a fusion power plant, T. Schneider, S. Lepicard, CEPN-NTE/00/08, September 2000.

- Radiological impacts assessment of routine releases from a fusion power plant: sensitivity analysis on site location, S. Lepicard, T. Schneider, CEPN-NTE/00/11, November 2000.

- Socio-economic research on fusion SERF2 (1999-2000), Task 1: Externalities of fusion, CIEMAT, Final Report, January 2001.

TASK LEADER

Thierry SCHNEIDER

CEPN
Boîte Postale 48
92263 Fontenay aux Roses Cedex

Tél. : 33 1 46 54 76 59
Fax : 33 1 40 84 90 34

E-mail : schneider@cepn.asso.fr

UT-SM&C-REL

Task Title : RELIABILITY MODELING & ASSESSMENT

INTRODUCTION

The task focuses on reliability modelling and assessment in support to EFDA R&D program. It should contribute into providing models to simulate as precisely as possible the reactor systems and components, in terms of failure rates, reliability/availability and maintainability. In case of basic failure data unavailability, it should provide evaluation schemes and procedures to assess reliability/availability of reactor systems and components.

2000 ACTIVITIES

The major effort was oriented towards the problem basic failure data relevant to fusion energy components and systems. Failure data relevant to fusion systems and components are lacking and the few sets of available data need to be properly collected, treated and stored in adequate files for fusion community use.

However, many existing experimental fusion machines have enough operating experience behind and their feedback in terms of failure events is of great interest for reliability/availability activities. Among these machines, one may recall JET, Tore-Supra, D-III and J-60.

Besides the operating experience feedback of the existing machines, experts' judgment and consensus are necessary in order to produce coherent failure data sets.

During 2000 activities, work was been focused has worked upon operating experience feedback data mining, collection and treatment, as well as, upon international collaboration for constructing coherent and recognized fusion failure data file.

TORE-SUPRA OPERATING EXPERIENCE FEED-BACK

Existing experience from Tore-Supra does not allow the extraction of exhaustive representative failure data because failure events are few if not rare. However, the existing operation feedback of some systems, may be significant enough to enable the extraction of some failure data for some specific applications. This limited set of failure data may be very helpful in identifying lacks in standard procedures needed for data collection and their treatment.

These required procedures will be developed according to normative procedures already used for the processing of the operating experience of the conventional power plants.

Our work is thus to be guided by normative procedures recommended by ISO and IEC (International Electro-technical Commission). In case of lack of normative procedures, industrial procedures recommended by EDF and similar industry will be applied. That is particularly the case for the procedures describing the evaluation methods of point estimates, confidence level, prediction intervals and tolerance intervals for the failure rate items, and the times to failure which follow exponential distribution.

This implies that the failure rates (defined by IEC publication 60050(191)-12-02) is constant with time. It should be noted that although reference is made above to failure rate, the numerical methods recommended in the IEC normative references (and ISO) are equally applicable to other event occurrence rates provided the times to the occurrence of the event follow an exponential distribution. Details of vocabularies, statistical procedures and related issued are fully covered in the IEC references given in [R1 to R6].

The restrictive set of events that has been used for this exercise, contains 8 events, namely:

1. Dumps related to quenches induced by current heating.
2. Dumps related to quenches induced by runaway-electron heating.
3. Dumps non-related to magnet quench.
4. Toroidal field recovery.
5. He-refrigerator recovery.
6. Cold pump failure.
7. Plant overall He-leak.
8. TF standby at 80K failure.

These events are the most reported in the published literature concerning Tore-Supra operating experience, [R8-R12]. Events description, failure causes and consequences, related component (s) and events frequency evaluation are detailed in reference [P1].

As a result of applying the proposed procedures on Tore-Supra operating feedback experience, we may conclude the following about dump events:

- Dump due to quenches induced by current heating; has an occurrence probability of the order of 5.6 e-2 per demand at current higher than 1250A,

- Dump due to quenches induced by runaway-electron heating; no sufficient information to evaluate an occurrence probability,

- Dump due to external sources of perturbation; has an occurrence rate of the order of 0.25 /y/magnet, supposing magnets are identical.

Although, the three events are classified as dumps, they necessitate a specific care before considering them in an overall reliability assessment of the whole system. The analysis of these dump events showed how it is necessary to report about event's cause, mechanisms and consequences [P1]. All dump events are critical in terms of plasma availability. That is why one did consider the criticality of the event in this note. Occurrence probabilities and rates are necessary for the reliability assessment of a given system.

The study showed that recovery time (/mean shutdown time) is another parameter that needs to be assessed but it necessitates the full definition of the causes, mechanisms and consequences of the studied events. The mean recovery time parameter is necessary for the availability assessment of a given system.

TF recovery time is another key parameter in the availability assessment of any fusion plant. As far as Tore-Supra operating experience feedback is concerned, additional data are still needed before being able to assess the TF recovery time. A functional analysis of the TF Shutdown Event has to be carried out in order to determine in exhaustive way the causal events that may lead to the TF Shutdown Event.

He-leak event and its occurrence rate are among the important issues for Tore-Supra and other fusion plants as well. However, based on the published literature, data are not yet sufficient and does not allow assessing the leak rate of the plant.

As a final conclusion, the 2000 activity has allowed proposing a standard procedure for the processing of the Tore-Supra operating experience feedback. Also, it allowed us to identify the set of events that have a sufficient experience feedback and the set of events that still need additional effort of data collection, interpretation and processing.

CONTRIBUTION TO THE INTERNATIONAL COLLABORATION ON FAILURE DATA

In association with DRFC, DMT (DM2S since 01/2001) has organized an International Workshop, June 6-9, 2000 at CEA-Cadarache on the "Fusion Components reliability Data", under the auspices of the IEA-task 5 working group . Experts (27 participants) form experiment, operation, data mining and safety fields have contributed to establish common bases to collect, interpret, process and apply failure data for fusion systems and components reliability/availability needs. The participants were from: ENEA and FTU (5), UKAEA and NNC (4), KFZ (2), INEEL (1), ITER-JCT (1), EDF (1) and CEA (13). The main highlights and recommendations are:

- Task participants must keep in mind that fusion experimental reactors are different from power plants. Experiments are pushed past power plant limits. Experiments will suffer more component failures as new plasma regimes are explored.
- Large tokamaks like Tore Supra (superconducting magnets, in-vessel cooling) and JET (tritium handling, high wall load) have data applicable to next-step experiments. The tokamaks study operating experience to improve machine availability, efficiency, and determine how the machine is operating in general. At most machines the easily obtainable data only go back 3 or 4 years. After that, it is a data mining activity to retrieve it.
- There are many needs for reliability data, both quantitative and qualitative. Safety assessment quantification, quantify plant availability studies, personnel safety issue analysis, and the qualitative assessment of how systems fail to ensure accurate plant modeling in risk and safety studies. Such data are tedious to collect, but the data are valuable. There is a program to collect as much Superphenix data as possible to preserve it for future fission reactor design activities.

Details about SERMA contribution are in the workshop proceedings which is given in reference [P2].

REFERENCES

[R1] IEC 60050(191):1990, International Electro-technical Vocabulary (IEV), Chapter 191: Dependability and quality of service.

[R2] ISO 0353 -1:1993, Statistics - Vocabulary & symbols – Part 1: Probability and general statistical terms.

[R3] ISO 0353 -2:1993, Statistics - Vocabulary & symbols – Part 2: Statistical quality control.

[R4] ISO 2854:1976, Statistical interpretation of data.

[R5] IEC 60605-4: 1986, Equipment reliability testing – Part 4 – Procedures for determining point estimates & confidence intervals from equipment reliability determination tests.

[R6] IEC 60605-6: 1986, Equipment reliability testing – Part 6 – Tests for the validity of a constant failure rate assumption

[R7] J.L.Duchateau, Ph. Riband « Evaluation of magnet losses from He-II temperature measurements in TORE SUPRA. » Cryogenic Vol.38, n° 5 (1998) 513-517 .

[R8] J-L Duchateau, « G3 : Super conducting magnets for thermonuclear fusion » G3-Handbook of Applied Superconductivity, Institute of Physics Publishing, Bristol and Piladelphia, 1998, edited by Bern Seeber, University of Geneva.

[R9] B. Turck, « Six years of operating experience with Tore-Supra, the largest tokamak with superconducting coils. » 4th International Conference on Magnet Technology, June 11-16, 1995, Tampere, Finland.

[R10] J-L Duchateau, « Les aimants supraconducteurs pour la fusion thermonucléaire. »t Colloque Annuel 1996, section electrotechnique du clib EEA, Avril 3-4, 1996, private communication.

[R11] B. Gravil, R. Garbil, D. Henry, « Operating Experience of the Tore Supra cryogenic System » paper in preparation for a conference in India, has been transmitted to me by J.How.

REPORTS & PUBLICATIONS

[P1] M. Eid, “Reliability & Operating Experience Feedback: some selected events from a fusion experimental machine to guide in statistical procedures development” DMT/SERMA/LCA/RT/00-2822/A, September 2000.

[P2] John How (editor), “Workshop on Fusion Components Reliability Data”, June 6-9, 2000, CEA Cadarache, International Energy Agency Cooperative Agreement on Environmental, Safety, and Economic Aspects of Fusion Power – task5, proceeding of the workshop (available from CEA/DRFC-Cadarache, 13800 St Paul-lez-Durance.

TASK LEADER

Mohamed Y. Eid

DEN/DM2S/SERMA
CEA Saclay
91191 Gif-sur-Yvette Cedex

Tél. : 33 1 69 08 31 75
Fax : 33 1 69 08 99 35

E-mail : Mohamed.eid@cea.fr

UT-SM&C-TDC

Task Title : INNOVATIVE THERMO-DYNAMIC CYCLES STUDIES (TDC)

INTRODUCTION

The task UT-SM&C-TDC is a contribution to the European Fusion Underlying Technology Program. This task concerns the study and the optimization of different thermo-dynamical cycles in order to define guidelines for optimizing the global efficiency of a fusion power plant.

2000 ACTIVITIES

The 2000 activities concerned the development of computational models aiming at performing parametric calculations on steam cycles of the secondary circuit of a fusion reactor.

The conversion efficiency sensitivity of the cycle to different parameters has been assessed and the optimization of cycle parameter values has been carried out.

The possibility to integrate the divertor power (which constitutes about one fourth of the reactor fusion power) in the conversion cycle has been assessed.

The CYTHER code was used to perform the calculations. This code, developed at CEA, to analyze a conversion energy system based on a Rankine cycle, was adapted to keep into account the divertor power.

THE CYTHER CODE

The computer code CYTHER [1] treats the case of a Rankine complex cycle. For a defined cycle, it finds out the theoretical efficiency, the powers concerning the steam generators, the turbines and the pumps, as well as all thermodynamic variables describing the components and the flows in each branch.

Some modifications were made to the code concerning the possibilities of the physical modeling and the adaptation to UNIX environment. This program was then validated on some examples whose results were known in advance.

DIVERTOR POWER MODELING

Modeling the insertion of the divertor power into the secondary circuit consists in introducing a new heat source in the cycle. Three different possibilities were assessed, which could also be combined:

- feedwater external preheater,
- feedwater external superheater,
- second steam generator.

Feedwater external pre-heater

The addition of this component did not present major difficulties. The diagram of the corresponding circuit is shown in Figure 1. The preheater was placed in the high pressure line of pre-heating, i.e. after the steam generator pump, in order to obtain higher saturation temperatures (about 300 °C instead of 150 °C). This allows to remove a strong power without starting phase change, the power of a heater of external source being, most of the time, more than twice than that one of a traditional heater. The results coming out from CYTHER indicate that in the steam generator the pinch point remains reasonable (higher than 35 °C) and the difference of pressure between primary and secondary (16 - 6 MPa) is coherent with cases treated in previous studies [2]. The power of the divertor corresponds roughly to 25 % of that of the principal steam generator (2400 Wkg^{-1}), that is approximately 600 Wkg^{-1}, while CYTHER indicates that only 256,8 Wkg^{-1} are effectively used here for pre-heating. The remaining power will have, thus, to be dissipated or used for another purpose. The inlet temperature of the primary circuit (divertor) in the heater is about 200 °C, which supposes that partial dissipation of thermal energy will have to be ensured before passage of the primary fluid in the heater.

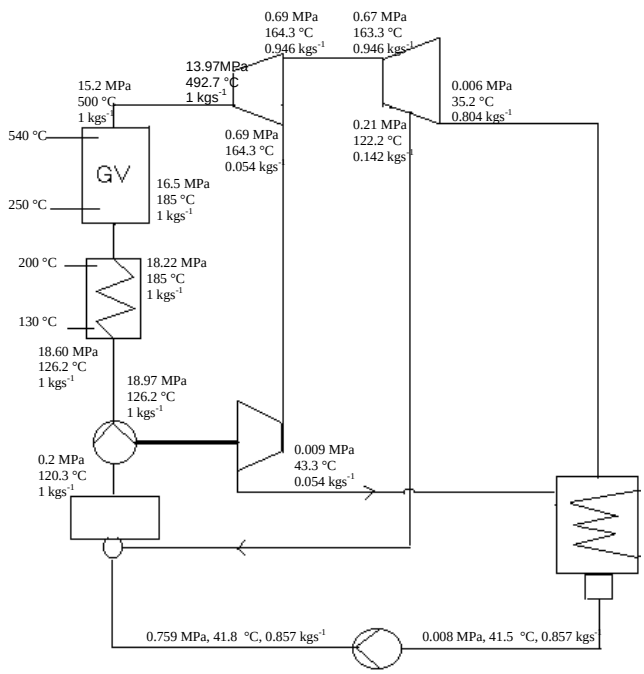

Figure 1 : Integration of the divertor as feedwater external pre-heater, case 1

The theoretical efficiency rises to 39,56 %. However, it should be recalled that CYTHER uses simplifying assumptions. In particular the code does not take into account the consumption on site and some economic considerations in the choice of the components.

The total effects of these assumptions can be estimated by considering a loss of four to five points on the efficiency calculated by CYTHER. Nevertheless, the efficiency remains higher than that calculated for a cycle where the power of the divertor is not taken into account.

The same circuit was then studied under PWR conditions, therefore with lower pressures and temperatures. In the secondary, the water enters the steam generator at 8 MPa and 185 °C and leaves at 285 °C. The obtained efficiency, 34,63 %, is lower than the one obtained in the first example. This is explained by the reduction of the steam generator outlet temperature from 500 to 285 °C. This decreases of the steam overheating significantly reduces the power recovered by the turbines and the efficiency as well. The obtained effect is nevertheless very interesting because:

a) one integrates the power of the divertor,
b) one increases the output of ~32-33 % (DEMO) to > 34,5 %.

Feedwater external superheater

In the case showed in Figure 2 the power of the divertor (water-cooled) is integrated to carry out an overheating of the steam at the steam generator output (2800 Wkg^{-1}), with temperatures of primary bordering 550°C.

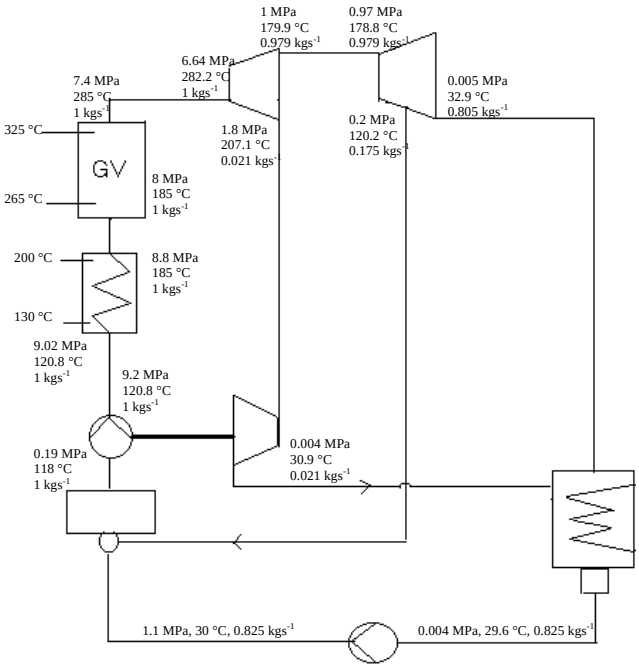

Figure 2 : Integration of the divertor as feedwater external pre-heater, case 2

Since the inlet temperature in the superheater is high (~500°C) because of the steam generator preceding it, the power which can be removed from the divertor circuit is even lower than in the previous case of pre-heating: 144,4 Wkg^{-1} whereas approximately 700 Wkg^{-1} would be available from the divertor. The remaining enthalpy (more than 500 Wkg^{-1}) has been dissipated at the superheater primary output. However, the obtained efficiency is 40,13 %.

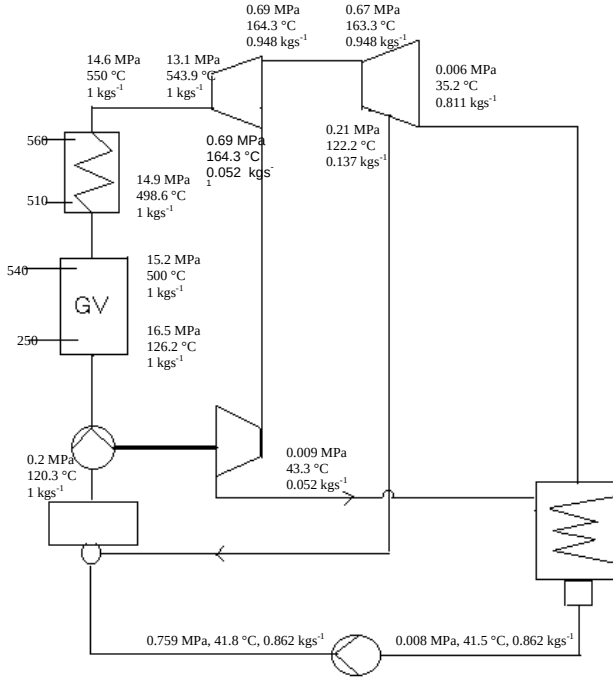

Figure 3 : Integration of the divertor as feedwater external super-heater

This value, which remains high even when considering its reduction due to the simplifying assumptions of the code, is comprehensible if one takes account of the maximum overheating temperature value.

Second steam generator

In the first version of the CYTHER code, only a serial circuit could be modeled. In order to integrate more than one steam generator, two components were introduced, the "flow diverger" and the "flow converger", which allow the modeling of a circuit with parallel lines. In the scheme showed in Figure 4, the power of the divertor is used to feed a second steam generator into the secondary circuit, in parallel with the first one supplied by the blanket.

While the steam generator supplied by the blanket works at inlet/outlet primary temperatures of 250/518°C, the steam generator supplied by the divertor functions at lower temperature (200/350°C with a pinch point of 20 °C at output of secondary), therefore its outlet pressure is lower.

In order to compensate these differences in pressure and temperature, a turbine was placed in the first branch before the flow mixture. In spite of that, the temperatures remain very unequal between the two branches, because the power of the steam generator associated with the divertor (1425,3 Wkg^{-1}) is higher than the quarter of that of the principal steam generator (1227,1 Wkg^{-1}).

Several solutions were considered to reduce this difference, like the addition of components of pre-heating or overheating independent for the divertor steam generator or the reduction of the temperature difference between input and output in the primary circuit, but they did not have a significant effect.

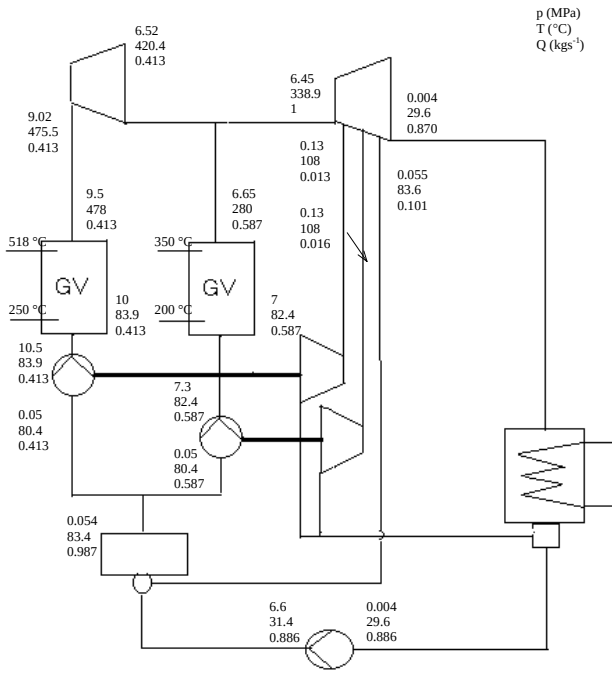

Figure 4 : Integration of the divertor as a second steam generator

A solution would consist in modifying the report/ratio of the flows in the two lines, but this parameter is rather difficult to regulate in the CYTHER code, which works with specific power. The efficiency so obtained (37,23 %) is rather low, if compared with the other cases. In fact, the added component provided an isothermal operation more reversible than for a heater or a superheater. The outputs are thus not easily comparable with those of the simple cases since one introduces significant junctions into the secondary.

CONCLUSIONS

The modeling of two new components has been introduced in the CYTHER code in order to study the secondary of a fusion reactor, which could take into account the power deposited on the divertor. From this preliminary evaluation, it comes out that the introduction of the power of the divertor into the secondary circuit led, as one could expect it, to an increase of the removed power as well as to an higher efficiency of the conversion cycle.

In particular, for secondary of reactor at high temperature, the better solution seems the introduction of the power of the divertor to supply a superheater, which would lead to efficiency of about 40 %. For cycles with lower pressure and temperatures (PWR conditions as in WCLL blanket), a solution could be a preheater. In this case the efficiency obtained is lower than in the previous one, but remains higher compared to the case where the power of the divertor is not taken into account in the conversion cycle (35% rather than 33%).

Furthermore, the introduction of the power of the divertor as a second vapor generator present some difficulties, although in the current version of the code the analysis of circuits with parallel branches is possible. The introduction of an imbalance of the flows into the branches could be a possible solution, but this will require a further development of CYTHER. At the end, these developments should allow also to study other cases combining vapor, preheaters and superheaters.

REFERENCES

[1] X. Raepsaet, M. A. Fütterer, E. Proust, CYTHER: a program for the lay-out of complex steam cycles, CEA Report, DRN/DMT, 94/297 June 1994.

[2] X. Raepsaet, E. Proust, Tritium Losses from Helium-Heated Steam Generators of Ceramic Breeder Blankets for DEMO, CEA Report, DRN/DMT 94/296, June 1994.

PUBLICATIONS

A. Li Puma, N. Chatillon, M. A. Fütterer, B. Roesslinger, Etude, avec le code CYTHER, du secondaire d'un réacteur a fusion, possible intégration de la puissance du divertor dans le cycle, CEA Report SERMA/LCA/RT00-2856/A

TASK LEADER

Luciano GIANCARLI

DRN/DMT/DIR
CEA Saclay
91191 Gif-sur-Yvette Cedex

Tél. : 33 1 69 08 21.37
Fax : 33 1 69 08 66 42

E-mail : luciano.giancarli@cea.fr

UT-SM&C-TMNC

Task Title : THERMAL-HYDRAULIC MODELS FOR NUCLEAR COMPONENTS

INTRODUCTION

The objective of this task is to improve our confidence about the physical models involved in the design of cooling systems for Helium-Cooled Pebble-Bed (HCPB) blankets and other Helium-cooled nuclear components.

The proposed activity for this task is to improve the confidence about the physical models used in the thermal-hydraulic code FLICA, developed at CEA, for the application to the design of the cooling systems for Fusion Reactor In-vessel components, in particular that of the EU Helium-Cooled Pebble-Bed (HCPB) blanket.

The FLICA 4 code is mainly devoted to water-cooled fission reactors and therefore is able to handle the cooling systems of water-cooled fusion reactor in-vessel components. On the other hand, for handling Helium-coolant systems, such as those associated with the HCPB blanket, it is necessary to implement the data and models corresponding to the Helium and the specific models to describe the physics (thermal-hydraulics and heat conduction within the structures). Thermodynamic data for Helium and suitable closure laws for convective heat transfer and wall friction have been implemented and validated in 1999.

As gas-cooled reactors are operated at high temperature, radiative heat transfer (between fuel elements and between fuel and gas) should be taken into account, particularly to model accidental transients.

2000 ACTIVITIES

Implementing a radiative heat transfer model in FLICA 4 needs more effort than just providing a new correlation for convective heat transfer for instance, because radiative heat transfer means large modifications in the procedure used to solve the heat transfer. When considering only convective heat transfer, each fuel element is coupled to only one fluid cell, which allows an independent computation for each fuel. Radiative heat transfer is much more complicated, because the heat transfer is no more located in a sole fluid cell (at the fuel wall).

Full 3D radiative heat transfer seems quite complex to model, because there are a lot of emitting surfaces in the reactor, resulting in a very high coupling between the surfaces. Furthermore, we need to consider the gas as a participating media, in order to compute the cooling effect of the gas. The main task in 2000 was to define a simplified model, and to specify the modifications in the FLICA 4 code.

The simplest case to consider is heat transfer between black bodies in the void (or a non-participating media). In that case, each surface of the cavity is a perfect emitter and absorber (no reflection), and there is a direct relationship between the net heat flux Q on a particular surface k and the temperatures T of all the surfaces:

$$Q_k = \sigma \Sigma_i F_{k-i} (T_k^4 - T_i^4)$$

The only difficulty is then to compute the view factors F between each couple of surfaces. There are analytical solutions for simplified geometry, particularly for 2D configurations, but the general case needs to solve a integral geometrical relationship.

Unfortunately the fuel elements are not black bodies, but they can be considered as gray: emission and absorption are not perfect, but remain isotropic. The net heat fluxes on the surfaces can be obtained by solving a linear system, where A and B are matrices containing the view factors and the emissivities:

$$A\ Q = B\ T^4$$

If considering emissivities as functions of temperature, the previous system is no more linear, and an iterative procedure is needed to solve it.

Finally, when taking into account the gas in the radiative heat transfer process, there are two main complications: diffusion and absorption, which can both depend on the wave length. In order to simplify the problem, diffusion can be neglected, and the relationships between heat fluxes and temperatures can be formulated in a matrix form:

$$A\ Q = B\ T^4 + C\ T_g^4$$

As previously, this system is non-linear if emissive properties of gas or surfaces are functions of temperature.

Specifying a radiative heat transfer model in FLICA 4 mainly consists in defining appropriate hypothesis to simplify the problem.

Concerning geometry and view factors, the coupling between surfaces is proportional to the inverse square of the distance, which let us consider only close surfaces: the view factors are computed only between surfaces at the same axial level, and connected to the same flow channel.

This hypothesis reduces the number of view factors to calculate, and allow the use of analytical formulations. Furthermore, the interaction with the gas is much easier to compute, as there is only one fluid cell between two surfaces of a same cavity. The size of the non-linear systems to inverse are also limited.

FURTHER WORK

The next step is to implement the specified model of radiative heat transfer between the gas and the fuel and between the fuels. Finally, the application of the extended FLICA4-code to the HCPB blanket helium-cooled system will be performed.

TASK LEADER

D. CARUGE

DEN/DM2S/SFME/LETR
CEA Saclay
91191 Gif-sur-Yvette Cedex

Tél. : 33 1 69 08 21 61
Fax : 33 1 69 08 85 68