Task Title: DEVELOPMENT OF HELIUM CIRCUIT COMPONENTS

INTRODUCTION

The CEA works on the generic helium technology for the development of the Gas Cooled Reactor (GCR).
Several main objectives have been determined to verify the feasibility of the very high temperature technology of the GCR:

- Tests and qualifications of the specific high temperature and pressure helium technology processes on small facilities: tribology, thermal insulation, leak tightness, instrumentation, gas purification, allow to improve the knowledge on the generic technology.

- Technological qualifications of prototypic components (intermediate heat exchanger, valves, hot-duct,…) in representative conditions of temperature, pressure and flow rate of helium, on a technological loop called "HELITE" (1 MW).

- Validation of the computer codes in the fields of thermomechanics, thermohydraulics and operations and systems.

- Tests on large loop (10 MW and more) of an helium turbine mock-up, and system studies (direct cycle, normal operation, accidental transient, partial load and emergency shutdown system studies) or large scale components and code qualification (indirect cycle).

In the HCLL (Helium Cooled Lithium Lead) concept of the fusion reactor blankets, some technological developments are of common interest with the fission Gas Cooled Reactor (GCR). The helium technology problems of the fusion HCLL reactor have been identified.
Thus, some experiments have been proposed in the same fields as those undertaken for fusion reactors. The first fields explored are tribology (put in operation 2003), thermal insulation (HETHIMO bench), leak tightness (HETIQ bench) (put in operation 2006) and helium side channel compressor.

2006 ACTIVITIES

In 2006, the HETIQ and the HETHIMO benches have been put in operation. The "Y" concept thermal barrier developed by the CEA has been qualified in static conditions. This thermal barrier has been characterised in GFR (Gas Fast Reactor) operating conditions (850°C He, 60 bar) and up to (850°C, 80bar). The thermal conductivity of the "Y" concept (figure 1) was evaluated; the estimated value is close to the expected one (0.7 W/m.K measured at 80°C, 850°C).

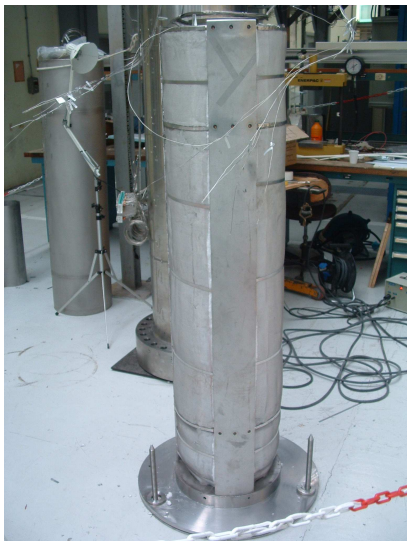

Figure 1: View of the "Y" concept thermal barrier

The tests performed on HETIQ bench give expected results on the HELICOFLEX seals at 500°C, up to 80 bar. The measured leak rate was 1.10^{-4} mbar.l.s^{-1} at these operating conditions. The expected value is 1.10^{-5} mbar.l.s^{-1}.

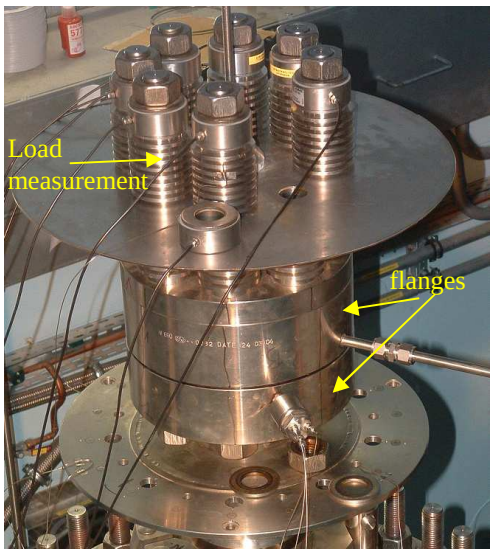

Figure 2: View of the HETIQ seals test device.
The Helicoflex seal is set up between the two flanges

The helium side channel compressor (figure 3) has been qualified from 5 bar to 80 bar of helium with different He flow rates.
These tests have allowed to validate this four stage side channel compressor technology: under the helium atmosphere, the electrical performances of the machine are satisfying and conclusions are also good as concern the mechanical performances of this prototype and its support.

Figure 3: View of the side channel compressor prototype

In 2006, HEDYT bench was designed (figure 4). This dynamic helium loop is expected to be put in operation during the first six months of 2007. The first tests to be performed on this bench will allow to achieve the side channel program of qualification. This bench will allow to heat helium gas at 850°C, 80 bar with a flowrate of 15 g/s in a first step.

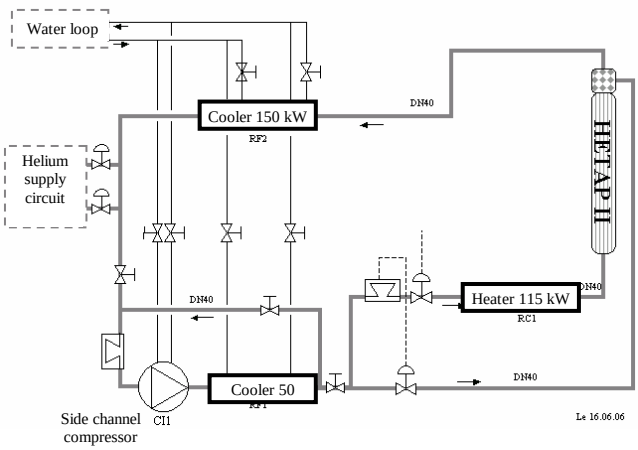

Figure 4: Flow diagram of HEDYT loop

In the frame of the GCR (Gas Cool Reactor), several gas correlations have been studied and evaluated [1].

CONCLUSIONS

In 2007 HEDYT bench is expected to be put in operation during the first six months. The first tests to be performed on this bench will allow to achieve the side channel program of qualification and to qualify electrical heaters in representative dynamic conditions during a long period. This facility will also contribute to the validation of heat transfer correlation and pressure drops assessments in helium.

The experimental program of the "Y" concept will be achieved in the first quarter of 2007 before the qualification of a second concept of thermal barrier "encapsulated".

The continuation of the HETIQ program will consist in the qualification of another type of seal: SPG seal.

REPORTS AND PUBLICATIONS

[1] L.AYRAULT, "Results on experiments on generic helium technology", Technical note, CEA/DTN/STPA/LTCG/NT 2006-043

TASK LEADER

Laurent AYRAULT

DEN/DTN/STPA/LTCG
CEA-Cadarache
F-13108 Saint-Paul-Lez-Durance Cedex

Tel. : 33 4 42 25 44 72
Fax : 33 4 42 25 66 38

e-mail : laurent.ayrault@cea.fr