Not available on line

Not available on line

Not available on line

Not available on line

Not available on line

Not available on line

TW2-TTBC-001-D01

Task Title: TBM DESIGN, INTEGRATION AND ANALYSIS BLANKET SYSTEM DESIGN AND ANALYSIS - INTEGRATION AND TESTING IN ITER

INTRODUCTION

In 2002, EU has endorsed the decision to concentrate the work on blanket modules for testing in ITER on a single coolant, Helium. Up to that time, two different coolants were envisaged for the EU Breeding Blankets: i) pressurized water for the Water Cooled Lithium Lead (WCLL) concept and ii) pressurized He for the HCPB concept (Helium-Cooled pebble-Bed). In this frame, the general objective of the Task TW2-TTBC-001-D01 is to develop and optimize (with regard to tritium breeding, heat removal and shielding capability) a Helium Cooled Lithium Lead (HCLL) breeding blanket concept for DEMO and its corresponding Test Blanket Module (TBM) to be tested in ITER.

2005 ACTIVITIES

2005 activities mainly concerned the redaction of the final report of the task [1] and a conceptual design of a Prototypical Mock-Up (PMU) to be tested out of pile in the European Breeding Blanket Testing Facility (EBBTF).

PROTOTYPICAL MOCK-UP

Basically, the mock-up (figure 1) looks alike the In-TBM [1] scaled to ¼ because the EBBTF facility is able to recover 350 kW which is around a quarter of the power which is deposited on the TBM. It features 3 (toroidal) × 2 (poloidal) radial cells, in which are inserted 6 Breeder Units (BU). As in the TBM, each BU is constituted by 5 Cooling Plates (CP) (figure 2), however, the possibility of reducing their number is not precluded. This could be needed for placing the breeder zone (BZ) heating elements, which will simulate the TBM-In nuclear power.

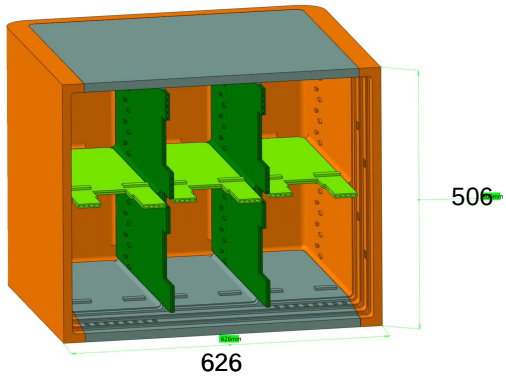

Figure 1: Rear view of the PMU

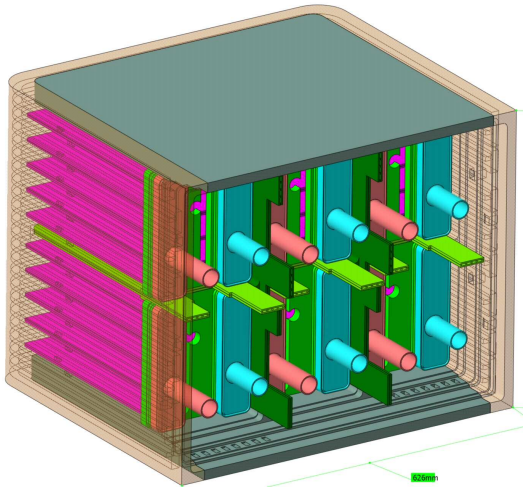

Figure 2: 3D rear view of the Bus

To be representative in terms of thermal and thermomechanical behaviour, the mock-up segment box will have the same geometry as the TBM one. Moreover, in order to preserve the Reynolds and Nusselt numbers, the FW of the PMU should be cooled by 4 passes channels with the same TBM cross section. While Stiffening plates (SPs) could be full (lower thickness should be however envisaged to simulate their reduced mechanical resistance due to the presence of the channels), the Cooling Plates (CPs) will feature cooling channels in order to evaluate the tritium permeation towards the He.

The main geometrical characteristics are presented in the table 1:

Table 1: Main geometrical characteristics of the PMU FW

FW channels number	5
FW channel legs	22
Nb of passes	4
Channel cross section	15 x 14 mm²
FW thickness	25 mm

The volumes and masses of the PMU materials are summarized in the table 2:

Table 2: Volume and mass inventories in the PMU

	Volume (m^3)	Masse (kg)
Steel	0.0614	480
He	0.0385	0.250
PbLi	0.0785	770
Total	0.178	1250

Table 3: Main thermal results of the PMU

	Mass flow (kg s^{-1})	T inlet (°C)	T outlet (°C)	Heat transfer coefficient ($W.m^{-2}.K^{-}1$)	ΔP (bar)
FW	0.34	300	402.4	5563	1.9
SP	0.07	402.4	457.9	652	0.009
CP	0.14	402.4	501.5	648	0.009

He flow and PbLi flow are basically the same as in the TBM. He first cools the FW and then, in parallel, a part of He cools the SPs and the CPs. Main results of the thermal-hydraulics analyse of the He circuit are presented in table 3.

The liquid metal enters in a BU and exits from the one below, feeding in this way the BU in parallel (by couple). These data permit to evaluate the PbLi mass flow versus number of circulation per day.

CONCLUSIONS [1]

This document constitutes the final report on the sub-deliverables 1d, 1e, 1g and 1h of the TW2-TTBC-001-D01 task.
The HCLL testing strategy proposed is to test four different test mock-ups or modules in a way that they will provide a progressive qualification of the HCLL blanket line up to an integral demonstration in the final Integral TBM (In-TBM). The different TBM are:

- EM-TBM: Electromagnetic TBM (plasma H-H);
- NT-TBM: Neutronic TBM (plasma D-D and first period of the D-T low cycle phase);
- TT-TBM: Thermo-mechanic & Tritium Control TBM (last period of the D-T low cycle and first period of the D-T high duty cycle phase);
- IN-TBM: Integral TBM (last period of the high duty cycle D-T phase).

The In-TBM looks alike a generic HCLL breeder blanket module for DEMO. It features 3 (toroïdal) × 8 (poloidal) radial cells, in which are inserted 24 Breeder Units (BU). An improved liquid metal flow path has been envisaged which allows higher re-circulation rates avoiding excessive LiPb velocities; parallel loops have been chosen rather than a meandering circulation on the whole module height. The liquid metal enters from the external collector and then it is distributed in some intermediate vertical distributing boxes located behind the BU. It enters in a BU and exits from the one below, feeding in this way the BU in parallel (by couple). Assuming 10 re-circulations/day, the PbLi mass flow rate will amount to 0.33 kg/s. With this figure, the liquid metal velocity will be ~6 mm/s in the feeding pipes and in the distribution box, ~0.08 mm/s in the BU current section and will increase to ~2.8 mm/s in the front opening between the SP and the FW. A Pb-Li draining is realized from the TBM bottom, to allow a passive draining.

The volumes and masses of the TBM materials for the whole module have been calculated. Eurofer mass is around 1640 kg and the volume of PbLi is around 0.290 m^3. It exceeds, with a frame thickness of 114 mm, by 0.09 m^3 the limit calculated on the base of the maximum allowed H release in the VV. The surplus being quite small, it could be assumed as acceptable under the hypothesis that in any case some countermeasures could intervene before that all the TBM will drain.
Mechanical attachments of the same type as those used for the ITER outboard shielding modules are foreseen for the connection of the TBM to the frame, consisting of:

- A flexible fixation (flexible cartridges) on 4 points to recover the radial mechanical loads while authorizing the thermal expansion in the poloidal and toroidal directions;
- A gliding shear keys system along a cross-shaped key way on the external back plate, to lock up the module displacements in poloidal and toroidal directions during the disruption loads, the thermal expansion in these directions being free; it also contributes to bear the weight of the module.

Thermal and mechanical analyses are carried out to design the IN-TBM preserving the relevancy to DEMO. The He cooling circuit is able to recover a heat flux of 0.5 MW/m² and a NWL of 0.78 MW/m². Two He flow schemes have been studied (one with a by pass after the FW). Both schemes cool first the FW and then, in parallel the SPs and the CPs. The total mass flow and the FW channels cross section have been optimized, aiming to minimize the pumping power, without exceeding the FW temperature limit (550°C). The He total mass flow is 1.5 kg.s-1 or 1.3 kg.s-1 according to the presence of a by pass or not. Currently, the design is not chosen, in attempt to the TW5-TTBC-001-D06 results. A transient analysis modelling a pulse of ITER shows that the characteristic time of the module is around 60 s.
Finally, based on the IN-TBM results, a prototypical mock-up has been roughly designed. It features 3 (toroïdal) × 2 (poloidal) radial cells, in which are inserted 6 Breeder Units (BU). This mock-up should be tested in the EEBTF.

REPORTS AND PUBLICATIONS

[1] A. Li Puma, T. Meynaud, Y Poitevin, G. Rampal, J.F. Salavy, F. Gabriel., “HCLL TBM for ITER – Engineering design, analyses and test programme & needs”, CEA report SERMA/RT/05-3568/A, 12/2005.

TASK LEADER

Franck GABRIEL

DEN/DM2S/SERMA
CEA-Saclay
F-91191 Gif-sur-Yvette Cedex

Tel. : 33 1 69 08 79 76
Fax : 33 1 69 08 99 35

e-mail : franck.gabriel@cea.fr

Not available on line

Not available on line

Not available on line

Not available on line

Not available on line

Not available on line

Not available on line

Not available on line

TW2-TTBC-002-D03

Task Title: TESTING OF SMALL-SCALE MOCK-UPS TO QUALIFY MANUFACTURING TECHNOLOGIES

INTRODUCTION

The aim of this study is to validate the manufacturing process of HCLL blanket mock-up by means of thermomechanical tests in representative operating conditions of the breeder blanket module.

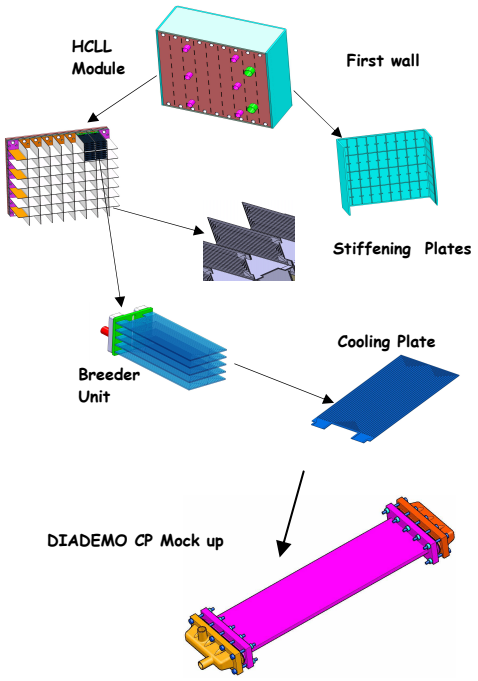

Figure 1: Composition of HCLL module – DIADEMO CP Mock-up

This manufacturing validation program will begin by the manufacturing process of the Cooling Plates (CP). For that a mock-up is manufactured in the task TW2-TTBC-002-D01. This mock-up manufacturing is relevant of the CP manufacturing, but its geometry is simplified (figure.1):

- 8 straight channels of 4x4.5 mm² with 360 mm length,
- 1 U turn in a distribution box,
- the width the 2x 8 channels is 94.5 mm,
- The cooling plate, the He feeding and collector are made of EUROFER.

The principal program steps are:

- Design of the He cooling loop of DIADEMO,
- Design of the PbLi test section
- Manufacturing,
- Thermomechanical tests,
- Endurance tests,

2005 ACTIVITIES

After the design of the helium loop during 2003, the manufacturing has been launched and it was completed at the beginning of 2005.

In the same time, the conceptual design of the PbLi test section has been carried out and the manufacturing launched by mid 2005.

RECALL OF DESIGN DATA:

The conceptual design of the PbLi test section is based on the following specifications:

- Object tested: 1 Cooling Plate of typical TBM dimensions and operating conditions.
- CP orientation: horizontal.
- PbLi container: in order to limit the PbLi inventory in the test section, it is accepted to use a rectangular steel container. The upper and lower plates of this container shall be at a distance of the CP of the same order of magnitude of the pitch between two cooling plates.
- Possibility to test several cooling plates: Even if only CP is tested here, it is recommended to design an external vessel compatible with the test of at least a group of 3 CPs separated by the reference pitch.
- Heat loading: A relevant power deposition on the CP (via PbLi by conduction) is expected.
- Instrumentation: thermocouples shall be instrumented on the plate external surface to follow the temperature evolution along tests; Tin/out He and Q He shall be measured.
- CP fixing: the CP shall be fixed on the container box in the same way as in the TBM.

PbLi TEST SECTION

The PbLi test section is mainly composed by 2 pressure vessels (figure 2):
- The PbLi storage vessel,
- The test section vessel, where the cooling plate is located.

During the test, the CP is immerged in the liquid PbLi at 550°C and cooled by an internal He flow up to 500°C under 7 Mpa.

To limit the PbLi inventory in the test section, a rectangular steel container is put in the test section. The level of PbLi is controlled by means of differential pressure regulation between storage and test section. The fixation of CP has been designed in the same way than

TBM fixations. A relevant power deposition on the CP is made by means of electrical heaters how it is shown in figure 3.

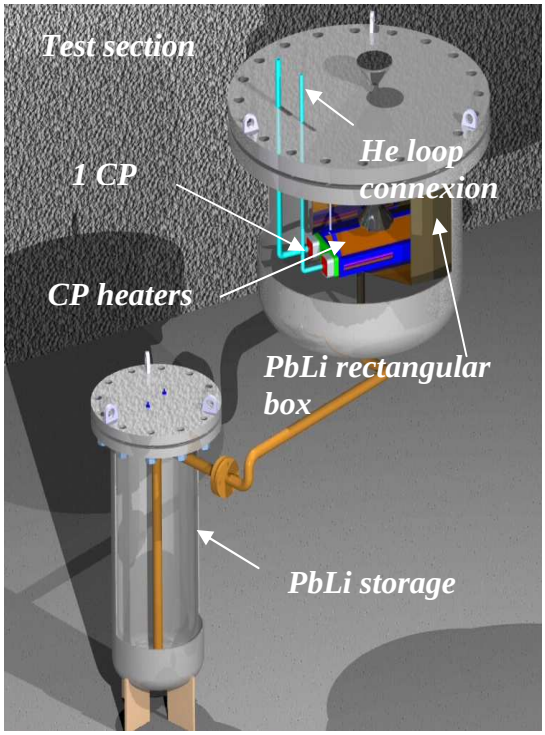

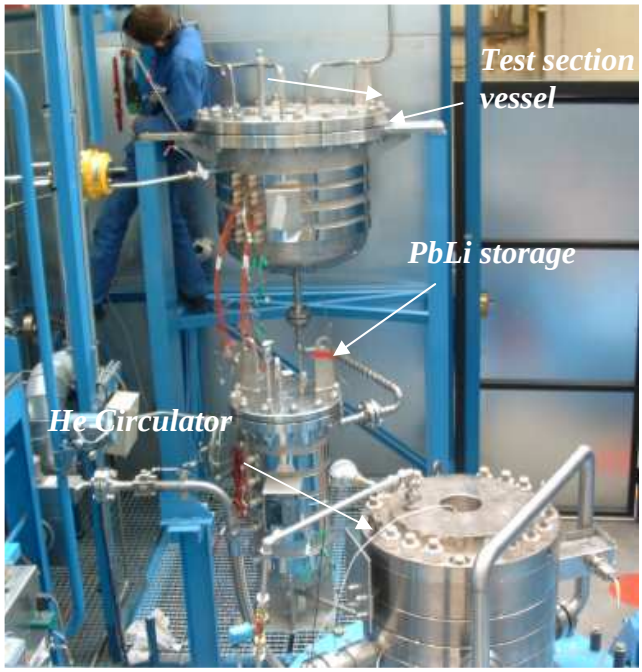

Figure 2: PbLi test section.

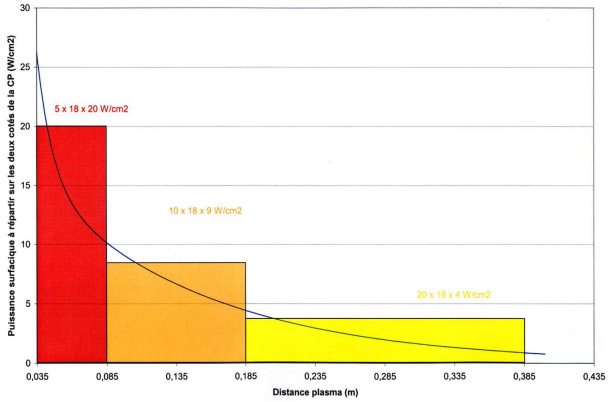

Figure 3: Illustration of the CP heaters

CONCLUSIONS

After this manufacturing phase, the test section is now available. Taking in account a CP mock-up delivery in april.2006 (TW2-TTBC-002-D01), the experimental program will begin in september 2006 up to the end of 2006.

TASK LEADER

Lionel CACHON

DEN/DTN/STPA/LTCG
CEA-Cadarache
F-13108 Saint-Paul-lez-Durance Cedex

Tel. : 33 4 42 25 74 25
Fax : 33 4 42 25 66 38

e-mail : lionel.cachon@cea.fr

Not available on line

Not available on line

Not available on line

Not available on line

TW2-TTBC-005-D01

Task Title: SAFETY AND LICENSING TEST BLANKET MODULE (TBM) ACCIDENTAL SAFETY STUDY

INTRODUCTION

Within the framework of investigations foreseen for the ITER, a Test Blanket Module (TBM) program is scheduled.

The Association Euratom-CEA (Commissariat à l'Energie Atomique) has been developing a concept cooled by helium called HCLL-TBM (Helium Cooled Lithium Lead-TBM – figure 1). The HCLL-TBM design stage is performed in DM2S/SERMA at CEA-Saclay [1], while the DER/SESI at Cadarache carries out thermal and thermal-mechanical analysis of the HCLL-TBM under accidental conditions.

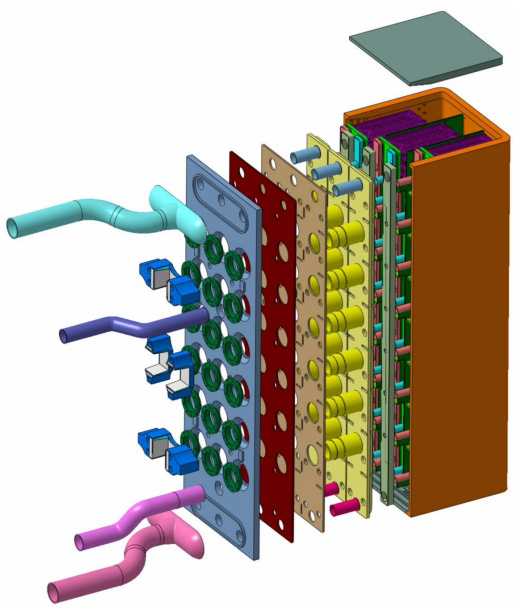

Figure 1: HCLL-TBM 3D view

Two accidental conditions have been assessed:
- firstly, HCLL-TBM behaviour under accidental pressurization,
- secondly, HCLL-TBM behaviour under Loss Of Flow Accident (LOFA).

The first accident assessement was subcontracted to Technicatome company while the LOFA accidental situations were studied by the CEA.

In 2004, the HCLL-TBM behaviour under Loss Of Flow Accident (LOFA) operating conditions was assessed in one of its worst scenario, LOFA with active plasma shutdown after delayed accident detection with disruption. In this case, the results obtained show that there is no risk of HCLL-TBM break and these results were already issued in 2004.

In 2005, the study was completed by the assessment of LOFA with no active plasma shutdown. Hence, this article deals with this scenario.

The strength capability has been determined according to the Structural Design Criteria for ITER (I-SDC) [2] design rules level D criteria.

2005 ACTIVITIES

The main characteristics of the computations are recalled hereafter.

Three models were carried out with the finite elements code (CAST3M). These models allow the thermal and the stress fields to be computed within the HCLL-TBM during the transient.

Each model is representative of a specific part of the HCLL-TBM (figures 2 and 3):
- model Nr 1: lower part of a Breeder Unit (BU) with a horizontal Stiffening Plate (SP) completely welded to the First Wall (FW),
- model Nr 2: middle part of the cell without horizontal SP,
- model Nr 3: upper part of the cell with Lithium- Lead opening between the horizontal SP and the rear of the FW.

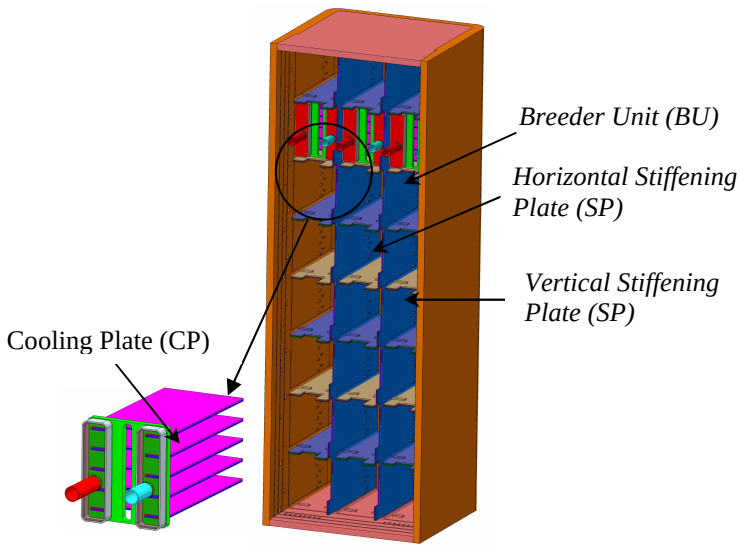

Figure 2: Inner components of the HCLL-TBM

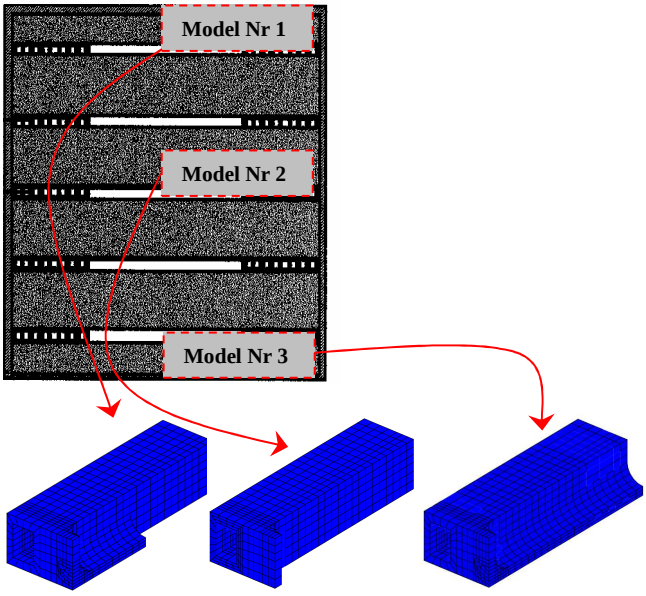

Figure 3: Positioning of the three models into a BU – FW meshing of Nr 1, 2 and 3 models respectively

The 2004's work having shown that the maximum temperature was reached in the middle part of the BU (model Nr 2) this model was only studied in 2005.

The complete meshing of the model Nr 2 is given in figure 4 to figure 7.

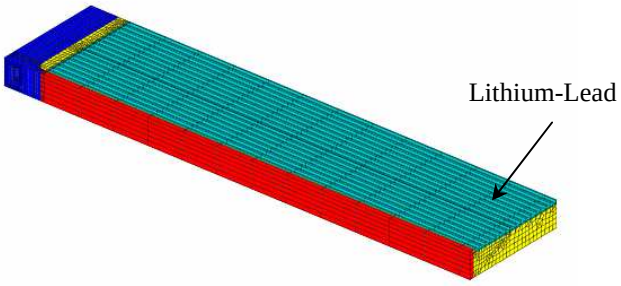

Figure 4: Model Nr 2 - Middle part of the BU without horizontal SP

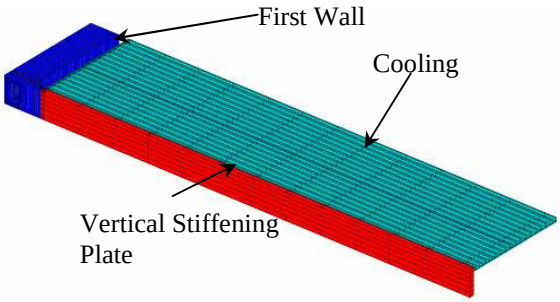

Figure 5: Representation of steel structures (EUROFER)

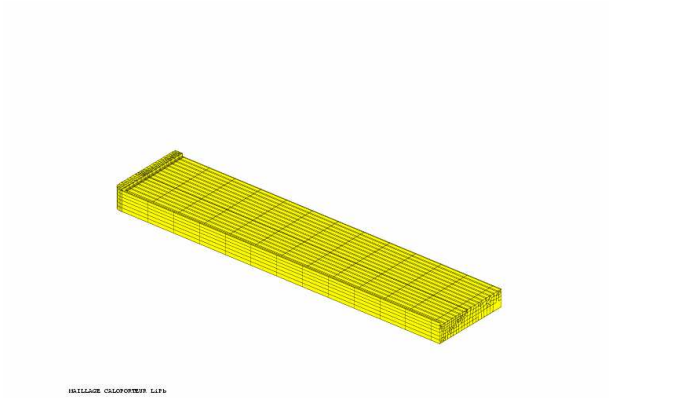

Figure 6: Representation of the coolant (Lithium-Lead)

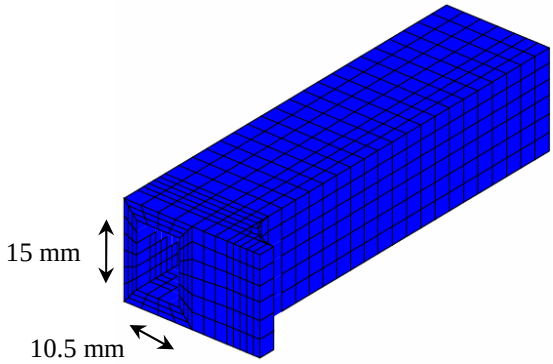

Figure 7: Representation of the FW

The thermal-hydraulic features taken into account are summarized in figure 8.

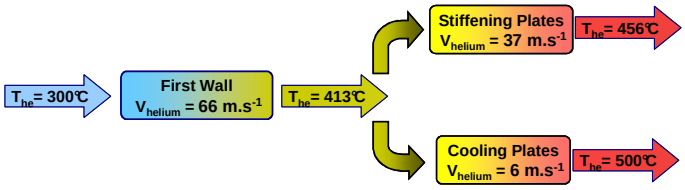

Figure 8: Helium flow scheme

The thermal loads considered in this study are:

- Heat Flux (HF) on the FW of 0.5 MW.m^{-2}
- Power density distribution related to a Neutron Wall Loading (NWL) of 0.78 MW.m^{-2}.

The simulation establishes, first, the permanent thermal field under normal operating conditions, and then assesses the accidental transient. The transient consists in the total loss of helium flow after one second. This event occurs everywhere in the helium channels of the HCLL-TBM. The no active plasma shut-down case assumes that the accident remains undetected and the plasma continues to burn with a peak surface heat flux of 0.5 MW.m^{-2}, until the FW reaches a temperature of 1100°C. At this temperature, the beryllium layer starts to sublimate into the plasma and stops it so that the surface heat flux drops to zero.
The calculations performed indicate that the FW temperature reaches 1100 °C some 35 seconds after the beginning of the accident.

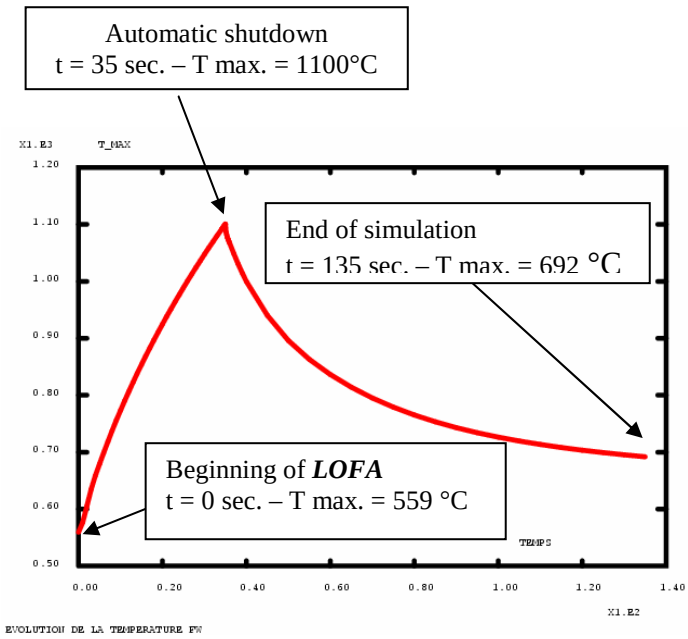

Figure 9: FW temperature evolution – Model Nr 2 – Middle part of BU complete loss of helium flow with non active plasma shut-down

The detailed thermal results are given in figure 10 to figure 13 when the temperature is maximum (t = 35 s).

The FW temperature is high in front of the plasma. The temperature rise concerns the overall thickness of helium channel. The FW rear zone remains relatively cold at 550°C.

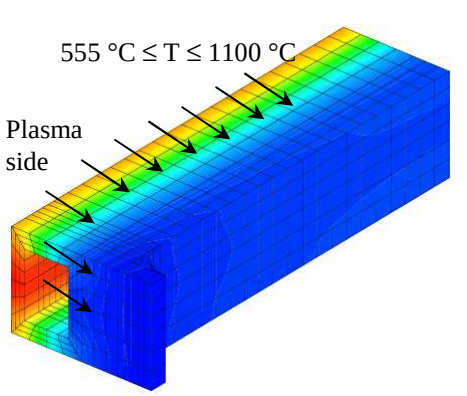

Figure 10: FW temperature field Model Nr 2 – t = 35 sec

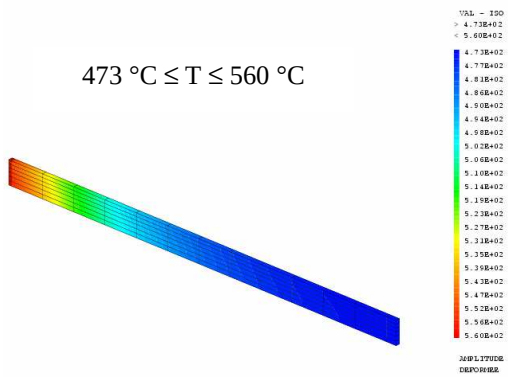

Figure 11: Vertical SP temperature field Model Nr 2 – t = 35. sec.

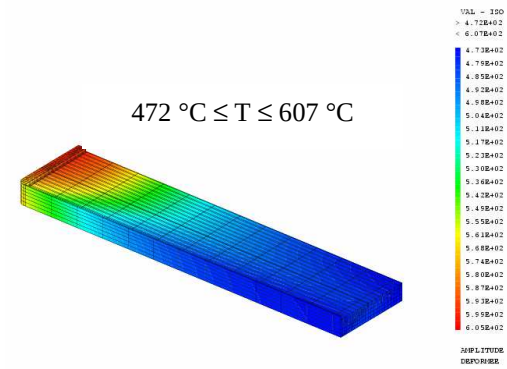

Figure 12: Lithium-Lead temperature field Model Nr 2 – t = 35 sec.

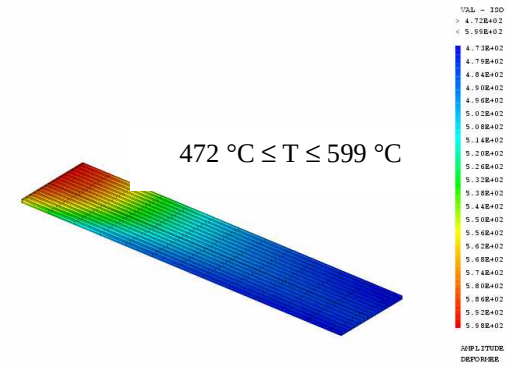

Figure 13: CP temperature field Model Nr 2 – t = 35 sec.

Concerning the mechanical loads, the internal pressure of 8.0 MPa is applied to the FW helium channel (figure 14). The mechanical analysis is carried out at 35 seconds.

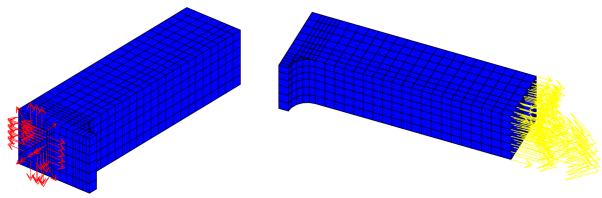

Figure 14: Model Nr2 – Mechanical loads including end effect (yellow arrows)

The equivalent primary stresses (Von Misès) are computed and displayed in the FW meshing (figure 15).

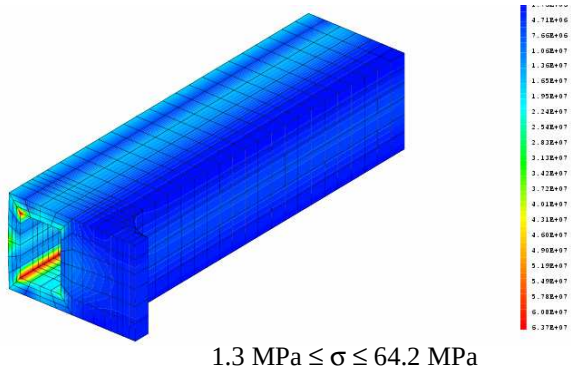

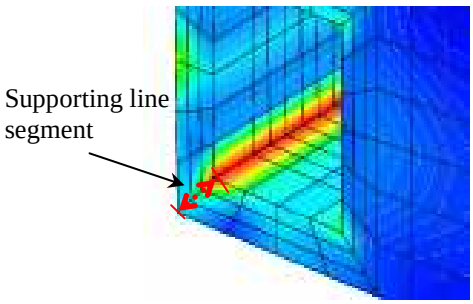

Figure 15: Model Nr 2 – Equivalent primary stress (Von Misès) at 35 sec.

The stress intensity is 64.2 MPa. The maximum stress area is located in the corner of the helium channel. Hence, the mechanical analysis is performed at this location (see supporting line segment in figure 15). The main thermal-mechanical features are:

- average temperature θ_m,
- primary membrane stress intensity P_m,
- primary local membrane plus bending stress intensity $P_L + P_b$.

The results obtained on the middle part of the BU are summarized in table 1.

Table 1: Thermal-mechanical results

θ_m (°C)	959.4 °C
$\overline{P_m}$ (MPa)	31.6
$\overline{P_L + P_b}$ (MPa)	63.2

The P_m and P_L+P_b stresses are compared to the allowable stress intensity function of the event classification.

For the LOFA event, the level D criteria of I-SDC are applied:

- $P_m \leq$ Min {2.4 S_m (θ_m) ; 0.7 $S_{u\ min.}$ (θ_m)} (1)
- P_L+$P_b \leq K_{eff.}$ x Min {2.4 S_m (θ_m) ; 0.7 $S_{u\ min.}$ (θ_m)} (2)

where K_{eff} = 1.5 in this case S_m is a temperature dependent allowable stress intensity and $S_{u\ min.}$ the minimal value of the ultimate tensile strength.

In that case, the average temperature of supporting line segment is 959.4°C. Unfortunately there is no allowable stress intensity available up to this high temperature level (see figure 16). The maximum value is given at 700°C and is equal to 97 MPa [3]. A linear extrapolation at higher temperature indicates that criteria will not be verified since the temperature will exceed 755°C. The HCLL-TBM should not resist to this kind of scenario.

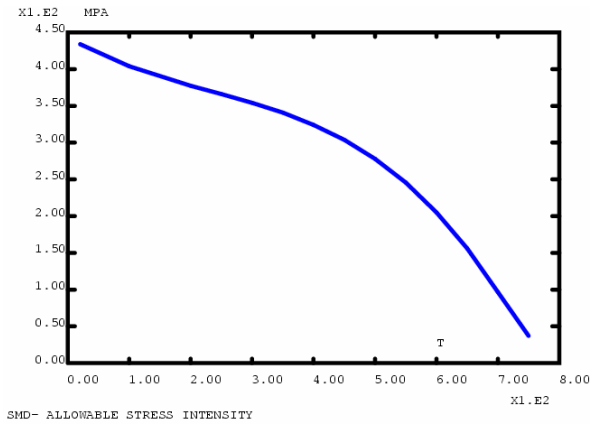

Figure 16: EUROFER - Min {2.4 S_m ; 0.7 $S_{u\ min.}$ } versus temperature

CONCLUSIONS

The thermal-mechanical study performed in 2005 concerns the HCLL-TBM behaviour under a LOFA event with no active plasma shut-down.

Regarding this accidental event, the temperature increases so much that HCLL-TBM should not resist if the surface heat flux is maintained (average temperature through the FW thickness is larger than 950°C after 35 seconds).

Today, the scenario needs to be better analysed, in particular with regard to the requirements in term of active plasma shutdown. Future work will consist in calculating more precisely the available delay before non-respect of criteria and in checking the capability of the existing protection systems to be activated in this delay. The beryllium layer on the FW face in front of plasma will be also added.

REFERENCES

[1] Report DM2S SERMA/LCA/RT/03-3350 Helium Cooled Lithium Lead Test Blanket Module for ITER outline design and manufacturing sequence. (EFDA TASK TW2-TTBC-001-D01) *A. LI PUMA et al.*

[2] ITER G 74 MA 8 01-05-28 W0.2 ITER Structural Design Criteria for in-vessel components (SDC-IC)

[3] DMN Technical Report DMN.DIR/NT/2004-02/A Fusion Demo Interim Structural Design Criteria Appendix A Material Design Limit Data A3.S18E Eurofer Steel (EFDA TASK TW4-TTMS-005-D01) *F. TAVASSOLI*

REPORTS AND PUBLICATIONS

N. SCHMIDT, ITER – Outlines of the TBM for ITER calculations; CEA/DEN/CAD/DER/SESI/LESA/NT D0 14

N. SCHMIDT, ITER – Evaluation of HCLL-TBM thermal-mechanical behaviour in case of LOCA CEA/DEN/CAD/DER/SESI/LESA/NT DO 9 24/08/05

TASK LEADER

Nicolas SCHMIDT

DEN/DER/SESI
CEA-Cadarache
F-13108 Saint-Paul-lez-Durance Cedex

Tel. : 33 4 42 25 38 31
Fax : 33 4 42 25 36 35

e-mail : nicolas.schmidt@cea.fr

In close collaboration with Technicatome.

TW2-TTBC-005-D02

Task Title: TBM SYSTEM DETAILED SAFETY AND LICENSING

INTRODUCTION

In view of preparing the licensing of the HCLL TBM for ITER, the objective of the task is to assess the impact of the TBM on its environment from a safety viewpoint during the different phases of its lifespan (operation, maintenance, disposal, accident). The analysis and resulting documents will serve as a basis for the preliminary HCLL TBM safety assessment report to be produced and finalised at a later stage.

The present task was divided into four different phases:

- M1 - Review of TBM lifespan phases and potential accidental situations: Based on the analysis of the HCLL concept design and ITER safety standards, this phase involved reviewing potential accident sequences with the aim of identifying envelope scenarios. The milestone M1 has already been reached. The final report written by Dr. P. Lo PINTO was submitted in 02/2004, entitled "*Safety analysis of He-cooled lithium-lead test blanket module for ITER*".

- M2 - Release in normal and accidental situations: This phase involves studying the inventory of volatile radionuclides released under normal operating conditions. A study on the most penalising incidental situations developed from work carried out by the SERI laboratory will also make it possible to determine and estimate releases in such situations. It is question of estimating the source term, not the transfer of such releases into the surrounding environment.

- M3 - Occupational exposure: The contribution of the TBM to occupational exposure during operation, maintenance and accidental situations will be studied taking into account the ALARA principle, with the objective of minimising such exposure.

- M4 - Waste characterization and management: It will be verified that waste produced by the TBM can be integrated into the ITER global waste management strategy.

2005 ACTIVITIES

RELEASE IN NORMAL AND ACCIDENTAL SITUATIONS

Under normal operating conditions, two sources of releases have been identified. The first source corresponds to the indirect release related to the study of TBMs: destructive testing, etc. The second source corresponds to the transfer of tritium by permeation into the different systems. Within the scope of this study, it is difficult to determine the quantity of tritium to be taken into account during these two processes. In the first case, it is necessary to perform realistic estimates based on transfer calculations for materials under transient conditions. In the first case, it is necessary to evaluate an initial tritium inventory, a maintenance and analysis programme including the frequencies and types of operations to be carried out.
A specific task is launched to meet this need in 2006. This task will make it possible to evaluate the potential tritiated releases due to transfers.

Three accidental scenarios including one scenario with an aggravated variation can be identified

1- Break in the LOCA in-vessel

2- Break in the LOCA ex-vessel

3 - Break in the LOCA TBM

The third scenario is the most penalising of all three accident scenarios. The resulting activity in the gaseous phase therefore reaches a maximum of $7.1.10^4$ Bq, which is very low and insignificant in relation to the release estimates performed for other machine components.
In terms of other gaseous products, tritium largely contributes to the total activity

SPECIFIC ACTIVITY CLASSIFICATION

Pb-Li

The total activity at shutdown is assessed to be about $1.64.10^{13}$ Bq/kg, equivalent to about 50 10^6 GBq in the Pb-Li. Most of this activity (more of 80%) is due to the following nuclides: ^{3}H and ^{203}Pb. After a few days, most of this activity is due to H^3.
The dose rate observed in the Pb-Li loop is mainly caused by the $^{207\,m}$Pb nuclide with a level incomparable to any other nuclide and amounting to 2100 Sv/h for the whole coolant, whereas all other nuclides contribute at least 55 Sv/h. This nuclide disappears in less than an hour, as it has a half-life of only 0.8 seconds. $^{207\,m}$Pb is therefore not important, except in terms of designing the biological shielding.
After 12 days, the main nuclides responsible of 99 % for the total dose rate (about 10 Sv/h) are ^{182}Ta, ^{203}Pb, ^{22}Na. These nuclides will probably be responsible for the integrated dose during component handling and repairs owing to their significant half-life (> few days)

Eurofer

Upon reactor shutdown, the total Eurofer activity for front and rear locations is respectively about 1.90 10^{13} and 3.32 10^{11} Bq/kg. The main isotope expected is ^{56}Mn. This nuclide disappears in less than a day, as its half-life is only 2.58 hours.
After 12 days, most of this activity (more of 97 %) is due to the activation of the corrosion products, listed in decreasing order: ^{55}Fe, ^{51}Cr and ^{54}Mn. Carbon-14 only becomes the main element after 100 years of decay.
The dose rate observed in Eurofer is mainly caused by the ^{56}Mn nuclide at a level that is incomparable to any other nuclide, amounting to 3940 Sv/h for the front Eurofer (in comparison to 250 Sv/h for the others) and 61 Sv/h, for the rear Eurofer (in comparison to 5 Sv/h for the others).
After 12 days, the main nuclides responsible for more than 90% of the total dose rate are ^{54}Mn, ^{182}Ta and ^{51}Cr for the front Eurofer and ^{52}V, ^{54}Mn and ^{51}Cr for the rear Eurofer. For the same reasons in the Pb-Li, these nuclides will probably be responsible for the integrated dose during component handling and repairs.

Gaseous products

Radiological and isotopic inventories for the Pb-Li coolant were carried out. However, in order to evaluate the radiological impact in the case of an incident, it is necessary to assess the volatile products. The volatile radionuclides that may have an impact on the environment in the event of containment loss are H, He, Ne and F. These radionuclides can migrate from the cover gas and deposit in the cold zones or flow through the purification system.
This evaluation reveals the fact that tritium is the main radioelement.
The total activity can be considered as envelope seeing that it takes into account all the activity of the Pb-Li coolant that may be released during an incident. If a break appears in the Pb-Li system, only a part of this activity will be released, with the Pb-Li having been recovered in the leak tank and collectors.

DOSE RATE ESTIMATION

The radiological inventory lists the different radionuclides produced during the nuclear reaction (Pb-Li activation products, Eurofer structural activation products, etc.) Radioelements emitting gamma radiation produce a dose rate.
The dose rate of a source emitting gamma radiation at a distance ‘d’ can be calculated based on an empirical formula or a computer code such as the FISPACT or microshield codes. An available equivalent code, microshield, was chosen by our laboratory. This code is designed to calculate dose rates for an object defined at a given distance with the possibility of including various attenuating materials.
Calculations were performed at a distance of 104 mm for the TBM. These calculations do not take into account the contribution of Pb-Li contained in the TBM as it is assumed that the Pb-Li coolant has been drained from the TBM during maintenance.
The parameters used to calculate the Pb-Li loop dose rate concern the pipes: a wall thickness of 0.5 cm, a diameter of 5 cm, contained in a 10 cm thick Eurofer container, with a distance of 115.5 cm between the Pb-Li loop and the potential operator.

TBM estimated dose rate

Dose rate calculations for the Pb-Li coolant are low because the Pb-Li system represents one of the first barriers against the dose rate resulting from the activation of the Pb-Li coolant.
For Eurofer, when we take into account attenuation factors as the shields (bioshield plug, time and distance) the dose rate absorbed by the operators is significantly reduced and becomes insignificant.

Auxiliary loop estimated dose rate

The Pb-17Li loop is a closed loop involving the forced circulation of Pb-17Li. A main storage tank is used to feed the TBM with Pb-17Li eutectic by means of a specific pump. The main components of the Pb-Li loop are the TBM and the feeding tank.

WASTE CHARACTERIZATION AND MANAGEMENT

Generated waste

The operation and decommissioning of fusion reactors generate radioactive waste. This active waste is produced by the activation of the Pb-Li coolant and Eurofer materials owing to both the fusion reaction and the contamination generated by the activated materials.
Such waste is essentially found in a metallic form, resulting from both component replacement (TBM, etc.) and technological waste (vacuum pump oils, colt trap…). This waste will be both activated and tritiated.

Waste classification

All waste produced inside a contaminating zone will be considered as nuclear waste. This waste is classified depending on the nuclide specific activity, half-life and radiotoxicity.
The strategy developed in international documents is based on three possible solutions for such materials:

- Recycling: reusing the material in the nuclear industry,
- Clearance: releasing the materials from regulatory control,
- Disposal – as radioactive waste – of the waste fraction that cannot be recycled or cleared.

The concept of clearance is not acceptable in France. Waste classification is managed by the French Agency for Radioactive Waste Management (ANDRA).

Four categories of waste currently exist in France, depending on the mean activity and half-life of the nuclides:

- Very Low Level Waste (VLLW),

- Low Level Waste (LLW) corresponding to low or medium activity with a short life (< 30 years). The repository type currently used for such waste is final surface disposal at the Centre de Stockage de l'Aube,

- Intermediate Level Waste (ILW) corresponding to medium activity with a long life (> 30 years),

- High Level Waste (HLW) corresponding to high activity with a long life and thermal effects.

Based on the French criteria, a method of classification has been established.

After 10 years of decay, the Eurofer front part is classified as ILW. This classification is due to the activity of two radionuclides, tritium and Nb-94.
Downgrading to LLW seems possible for tritiated waste by means of a detritiation process. However, this process only concerns tritium-related ILW, with ^{94}Nb-related waste remaining "as is". Seeing that activities are only slightly higher than those stipulated in specifications, it is worth performing more precise estimates by reducing uncertainties to avoid over-classification. Furthermore, it seems perfectly reasonable to cut out parts with higher ^{94}Nb specific activities, which would make it possible to downgrade most of the Eurofer waste. Combined with a detritiation process, the quantity of ILW should remain low.

The Eurofer rear part is classified as LLW from the very first year. The mass of waste produced by the structure is about 1520 kg per TBM, which represents a very small fraction of the overall waste.

Pb-Li is classified as ILW. This classification is due to the considerable activity of tritium. However, this tritium activity is calculated disregarding the tritium extraction process used on the Pb-Li coolant. To correctly estimate the tritium activity at a given moment in the Pb-Li, it is necessary to complete the study on tritium inventories.

CONCLUSIONS

This study aims at evaluating the impact of HCLL TBMs upon several aspects: releases, dose rates and waste. Based on activation calculations and envisaged accident scenarios, several points are worth underlining:

In terms of releases, during an in-TBM accident as described in the document, tritium represents most of the activity. However, resulting releases remain below thresholds set by guidelines (accidental and incidental).

In terms of dose rates, a preliminary estimate was provided, making it possible to check that shielding is perfectly suitable to limit the received integrated dose.

Waste resulting from the HCLL TBM represents a small fraction of the waste totality generated by ITER. The Eurofer front part represents ILW whereas the rear part represents LLW. Specific treatment such as detritiation and removal of the areas most exposed to the neutron flux should make it possible to downgrade some of this waste (Eurofer TBM front). Consideration of such waste does not modify the overall waste management strategy. The Pb-Li waste is considered as ILW mainly owing to tritium activity. However, tritium activity is calculated disregarding the tritium extraction process and can therefore be said to be clearly over-evaluated. Additional study should make it possible to significantly lower the estimates provided in this document.
The tritiated releases during normal operation could not be integrated owing to the fact that this requires a specific study and dedicated simulation model designed to evaluate transfers by permeation and dynamic extraction. This study was launched in 2006 as part of an EFDA task.

REPORTS AND PUBLICATIONS

[1] TBM system detailed safety and licensing
DTN/STPA/LPC/2005/05, 17/01/2006
C.LACRESSONNIERE, O. GASTALDI

TASK LEADER

Christelle LACRESSONNIERE

DTN/STPA/LPC
CEA-Cadarache
F-13108 Saint-Paul-lez-Durance Cedex

Tel. : 33 4 42 25 35 50
Fax : 33 4 42 25 72 87

e-mail : christelle.lacressonniere@cea.fr

TW4-TTBC-001-D01

Task Title: TBM DESIGN, INTEGRATION AND ANALYSIS TESTING PROGRAMME AND ENGINEERING DESIGN OF THE FIRST TBM FOR ITER H-H PHASE

INTRODUCTION

The objective of this activity is the development of the design and testing programme of the first TBM (Test Blanket Module) to be inserted in ITER during the H-H plasma phase. Is it focused on the TBM itself and therefore the design of the associated systems and components is only very preliminary.

In fact, the main part of the TBM design activities have been performed under subtask TW2-TTBC-001-D01, published in [1], and are oriented towards the definition of a TBM design directly derived from the corresponding DEMO modules. These activities will permit to define the design of the TBM required for a fully integrated test program under D-T plasma after several years of operation (the so-called Integral TBM", IN-TBM).

In parallel to this activity, it is essential to define the design and the testing program of the first TBM to be inserted in ITER during H-H plasma (from the first day of ITER operation). The objective of the present subtask is to define a testing program and to develop a design, including instrumentation, for the first TBM able to take advantage of the ITER H-H phase to progressively qualify and optimize the TBM behaviour before D-D and D-T plasma operations. This TBM is often called "Electro-Magnetic TBM" (EM-TBM).

2005 ACTIVITIES

The activities for this subtask have been completed. Proposal for a testing programme during H-H plasma have been published [1]. Design and specific features of the EM-TBM have been described in [2], distributed in the Test Blanket Working Group (TBWG) framework. The finalisation of the subtask, consisting in the edition of the task final report, is expected in 2006.

TBM DESIGN

The basic features of the EM-TBM which will be used during the H-H phase of ITER operation and which is expected to be installed in ITER for day 1 are mainly the same as the ones described in [3] for the In-TBM. However, due to the different testing conditions in particular in the field of T management, special features will be necessary to cope with the EM-TBM specific objectives.

In the HH-phase, it is envisaged to assess the tritium diffusion in the PbLi and permeation into the He coolant. The tritium will be simulated using H/D diluted in the PbLi circuit which should be tested up to relevant DEMO temperatures. Tests at lower temperatures will allow in any case code validation because of the known relation between T solubility and temperature in the liquid metal. Preliminary estimations have shown that even if the PbLi is saturated, the amount of permeated H/D in the He cooling circuit will be small, in a range difficult to measure with classical instrumentation (mass spectrometers for example). In order to reach measurable quantities of permeated H/D, 2 central BU will not be fed with the nominal He cooling flow but with a reduced He "purge" flow coming by dedicated feeding tubes. This system is shown on figures 1 and 2. If the pertinence of such a system is confirmed, it will necessitate a specific circuit located in the port cell.

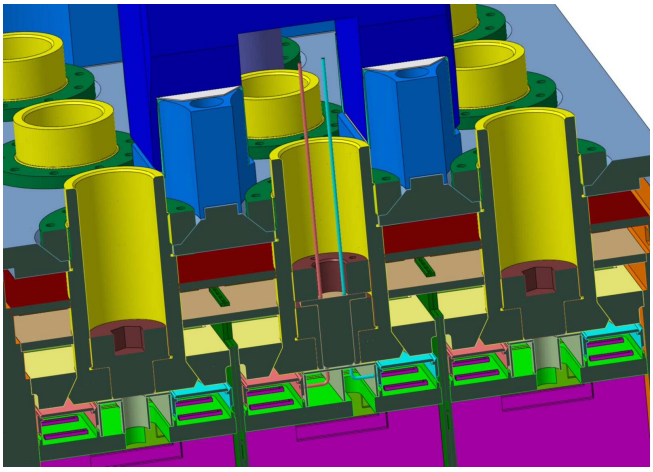

Figure 1: View of the HCLL EM-TBM with dedicated He feeding tubes

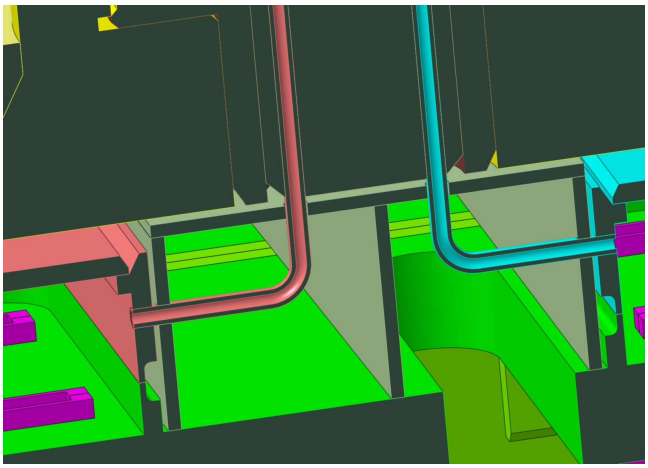

Figure 2: View of the HCLL EM-TBM with dedicated He feeding tubes (detail)

The by-pass tube collecting part of the He flow after the cooling of the first wall has been added in the EM-TBM design and is shown on figure 3.

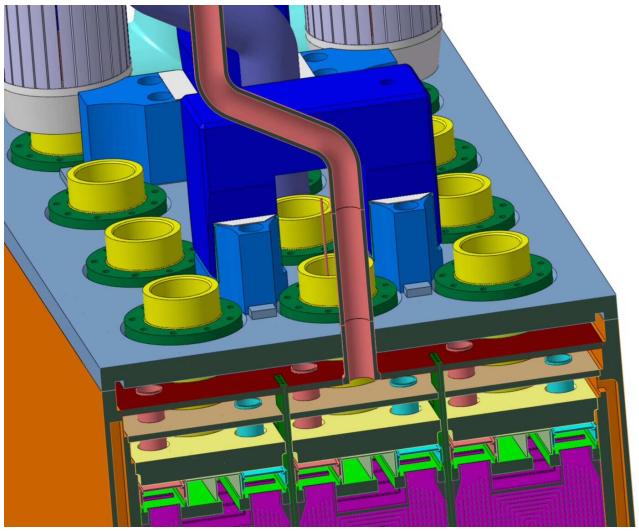

Figure 3: View of the HCLL EM-TBM with cut in the by-pass exit tube plane

REPORTS AND PUBLICATIONS

[1] A. Li Puma et al., The Helium Cooled Lithium Lead blanket test proposal in ITER and requirements on Test Blanket Modules instrumentation, Fusion Engineering and Design 75-79 (2005) 951-955

[2] J-F. Salavy et al., European Helium Cooled Lithium Lead (HCLL) Test Blanket Module (TBM) Detailed Description Document (DDD), Draft 2, november 2005.

[3] A. Li Puma, T. Meynaud, Y Poitevin, G. Rampal, J.F. Salavy, F. Gabriel., “HCLL TBM for ITER – Engineering design, analyses and test programme & needs”, CEA report SERMA/RT/05-3568/A, 12/2005.

TASK LEADER

Jean-François SALAVY

DEN/DM2S/SERMA
CEA-Saclay
F-91191 Gif-sur-Yvette CEDEX

Tel. : 33 1 69 08 71 79
Fax : 33 1 69 08 99 35

e-mail : jfsalavy@cea.fr

TW5-TTBC-001-D01

Task Title: TBM DESIGN, INTEGRATION AND ANALYSIS DESIGN AND ANALYSES OF THE HCLL TBM INCLUDING DESIGN OF SUPPORTING SYSTEM AND INSTRUMENTATION INTEGRATION

INTRODUCTION

The TW5-TTBC-001-D01 deliverable was aimed at completing the design and analyses for the HCLL Test Blanket Module, and for the EM-TBM (first TBM inserted in ITER) and the In-TBM (last and most complete TBM) versions. Based on an existing preliminary concept, various improvements were done in order to fix fabrication issues, to introduce a possible access to instrumentation, and the attachment system.

The specific features of the EM-TBM were also designed. Various analyses were performed aiming at demonstrating the withstanding of the structure under the main mechanical loads it is submitted to.

2005 ACTIVITIES

DESIGN EVOLUTIONS OF THE TBM

The last modifications on the In-TBM design were shared with the work done within the frame of the TW2-TTBC-001-D01 deliverable, and are reported in ref. [2], with the corresponding drawings. They have mainly consisted in improvements linked with fabrication issues, instrumentation access, and with implementation of the attachment system. The mounting sequence has been updated and all the welds configurations were listed to provide useful information (local geometry characteristics, available spaces) for welding developments.

The other modifications have consisted in a new optimised Helium flow scheme aiming at minimizing the pumping power and introducing a by-pass to adjust the cooling needs according to the power deposition repartition.

EM-TBM DESIGN FOR THE H-H PLASMA PHASE

The main test objectives of the first TBM to be tested in ITER device were defined:

- Environmental measurement of EM fields, eddy currents in blanket structure and mechanical effect during EM transients.
- Effect of ferromagnetic material inside the vacuum vessel.
- Evaluation of MHD effects on Pb-17Li flow.
- Demonstration of the TBM box integrity under heat flux and major plasma disruption (safety test for subsequent phase with T).
- Possible preliminary simulation of T-permeation test (H, D).

The EM-TBM will share the same materials, fabrication technology, box design, and attachment system as the following TBM. Its main specific features will be:

- A PbLi heating possibly performed outside the TBM (PbLi heater located in the pit) and/or by the He. Heaters could replace some cooling plates in the breeder units;
- FW cooled first (channels optimized dimensions: 14x15 mm^2), and use of a by-pass, which advantages are;
- less pumping power;
- better control on the flow rate needed for the first wall;
- without neutronic heating of the BZ, evacuation of the cooling power;
- In order to measure low permeation of H (or D) towards He, and to maximize the concentrations, chosen specific BU are fed with slower He flow by an independent He circuit (Ø2 mm pipes).

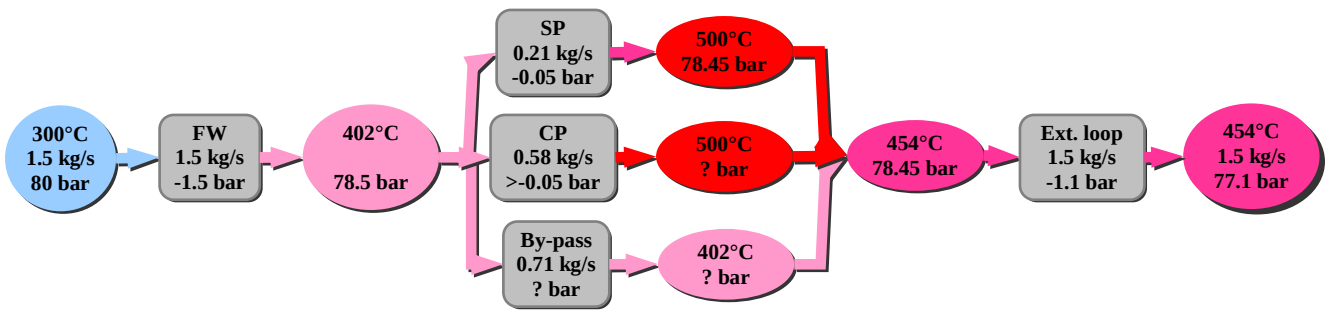

Figure 1: Optimized coolant flow scheme of the In-TBM

MECHANICAL ANALYSES

In order to validate the last improvements made to the design, several FEM analyses have been performed on relevant portions of the TBM geometry. These analyses share the following common characteristics:

- The basis for the geometry is the In-TBM;
- The computations are performed with CAST3M code;
- The FEM models rely on;
- Parabolic tetrahedrons elements;
- Linear analyses according to SDC-IC criteria verifications assuming 500°C as structure temperature;
- The applied loads are primary loads, such as pressure (in normal or accidental situations) and electro-magnetic forces (under disruption, considered as a normal situation). The secondary loads, such as those due to thermal expansions weren't considered: the complexity of the structure and of the thermal exchanges lead to specific models developments that will be performed in a next step. Moreover, the secondary stresses are not a major concern at this step of the design, and have no criteria in accidental cases.

HORIZONTAL SLICE

In order to validate the mechanical behaviour of the main design choices of the box structure, a model relying on a relevant "horizontal" slice of the TBM has been established. Two horizontal lines of breeding cells are represented, and considered as a periodic pattern in the vertical direction. The vertical mid-plane of the TBM is considered as symmetry plane to reduce the model. Periodicity conditions are applied on the boundary horizontal planes.

The stiffening plates are homogenized by using orthotropic properties equivalent to the real plates with internal channels.

Table 1: Horizontal slice model stresses analysis (MPa)

Segment	Normal pressure		Accidental pressurization	
	Memb.	Memb.+bend.	Memb.	Memb.+bend.
1	46	63	40	87
2	15	73	30	159
3	11	65	22	79
4			149	235
5			201	422
6			253	289
Criteria	*132*	*198*	*278*	*417*

The main results are summarized in table 1, and show a correct and admissible behaviour of this part of the structure regarding to the loads and criteria. The figure 2 shows the model, the locations of the analysis segment lines, and, as an example, the Von Mises stresses under accidental conditions.

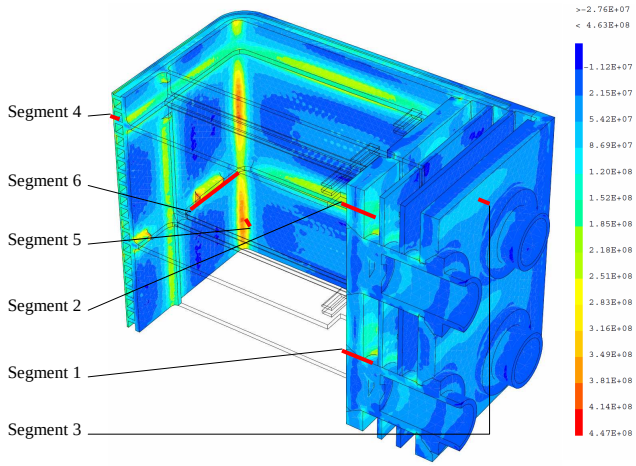

Figure 2: Von Mises stresses field under accidental pressure and analysis segment lines

TOP CAP

In order to complete the global analysis of the TBM under pressure loads, an analysis of the top cap has also been performed, based on a model similar to the horizontal slice one. The horizontal cutting plane used as boundary for the model is considered as a symmetry plane; this assumption being approximate, results in the plane vicinity are ignored.

The main results are summarized in table 2, and show a correct and admissible behaviour of this part of the structure regarding to the loads and criteria.
The figure 3 shows the model, the locations of the analysis segment lines, and, as an example, the Von Mises stresses under accidental conditions. The lower stress level on local zones comparable with the horizontal slice model shows the stiffening role of the cap.

Table 2: Top cap model stresses analysis (MPa)

Segment	Normal pressure		Accidental pressurization	
	Memb.	Memb.+bend.	Memb.	Memb.+bend.
1	26	43	103	164
2	12	147	14	179
3	57	89	56	126
4			74	265
5			123	286
6			183	364
7			233	275
Criteria	132	198	278	417

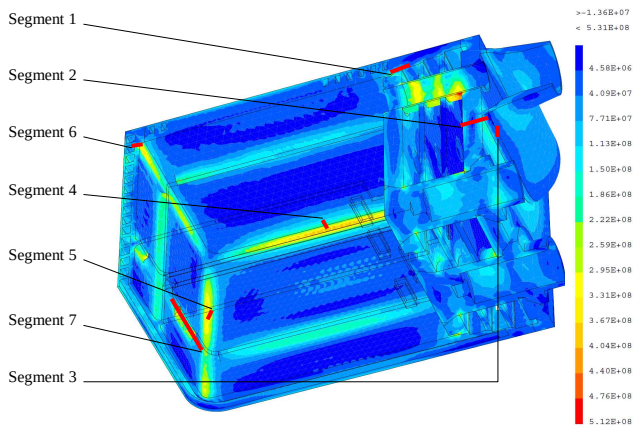

Figure 3: Von Mises stresses field under accidental pressure and analysis segment lines

STIFFENING GRID

In complement to the previous global calculations, a local model of the stiffening grid has been studied, in order to evaluate the local stresses due to the presence of the internal channels in the stiffening plates, under the dimensioning load case. The stiffening grid main role is actually to avoid excessive bending of the box walls in case of accidental internal pressurization. This model makes large use of the symmetries in the geometry and represents the cross-shaped junction with the first wall were the horizontal stiffening plates are incompletely welded to the first wall (openings of the PbLi flow path).
The figure 4 shows the model and the Von Mises stresses under accidental conditions. These stresses were not analysed according to the SDC-IC guidelines, but only compared to the allowable limit of 278 MPa for membrane primary stress at 500°C under accidental load, excluding the peak values. This criterion is fulfilled in the stiffening plates, but the margins are low in the vicinity of the first wall junctions.

ATTACHMENT SYSTEM

The last design step was used to implement an attachment and supporting system of the TBM able to withstand the disruption loads and TBM weight, while allowing thermal expansions of the box. In order to verify and validate the behaviour of this system, a local model of the flexible cartridge and a global model of the back plates and shear keys were established. Figure 5 gives a description of the attachment system and of situation taken into account for the load cases.

FLEXIBLE CARTRIDGE LOCAL MODEL

It is used to compute the stiffness properties of an equivalent beam model to be introduced in the global model. The stresses under the primary load (reactions forces computed with the global model) and secondary load (thermal expansion of the module) were also evaluated, showing large margins to the criteria in normal situations. Figure 6 shows the Von Mises stresses under the total load.

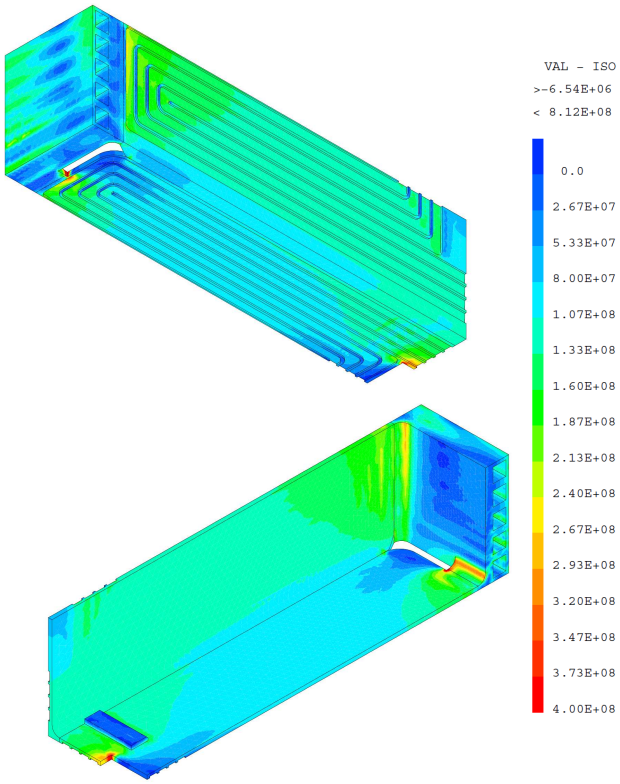

Figure 4: Von Mises stresses under accidental pressure (Red: over 400 MPa)

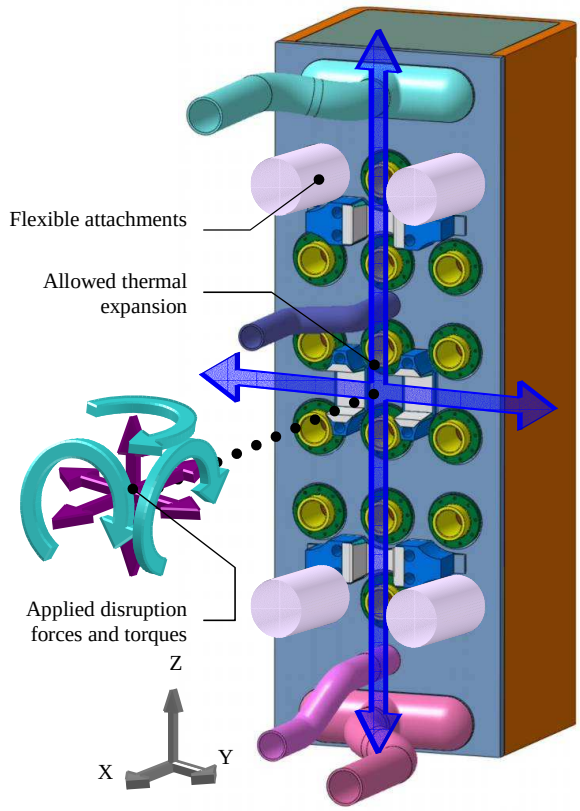

Figure 5: Description of the TBM attachment system

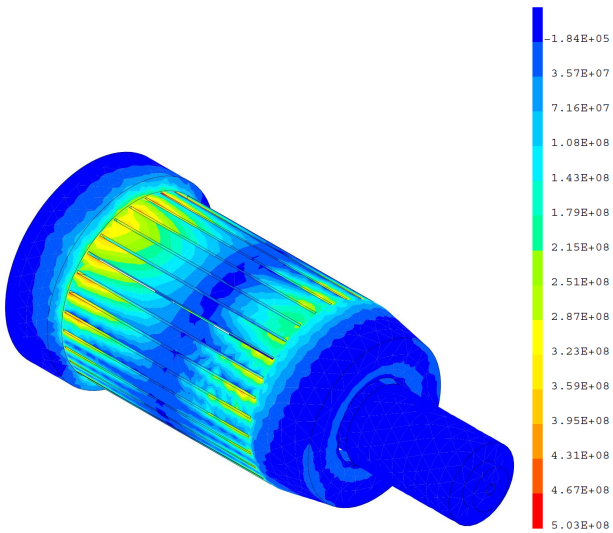

Figure 6: Von Mises stresses under primary + secondary load

BACK PLATES GLOBAL MODEL

The global model represents the back manifold (back plates and stiffening rods), the shear keys, and, by the way of beam models, the flexible cartridges. A study of the electro-magnetic loads in various cases of disruption ref. [1] was previously performed, giving the variations in time of the components of a torque given at the central point of the last back plate. The static load applied to the model corresponds to a torque which components are the maximum values of the components of the worst disruption event. The TBM weight was also calculated to the same point. These loads are synthesised in table 3. In order to apply the loads, an equivalent nodal force field was applied to the whole structure. Rigid body conditions were applied to the backplates boundaries, simulating the junction to the rest of the box. Gliding unilateral displacement conditions were applied to simulate the contacts between shear keys and key ways.

Table 3: Dimensioning loads (forces in MN, torques in MN.m) for the attachment system

	MD18msECQ	TBM weight
F_X	0,050	0,000
F_Y	0,003	0,000
F_Z	0,002	-0,047
M_X	-0,450	0,000
M_Y	0,003	-0,013
M_Z	-0,028	0,000
F_{mod}	0,050	0,047
M_{mod}	0,451	0,013

The Von Mises stresses analyses (figure 7) show near 50 % margins to the criteria on the most loaded back plate. The shear keys show peak values at strong discontinuities that could easily be relaxed with appropriate fillets. Out from these peaks, the values are acceptable.

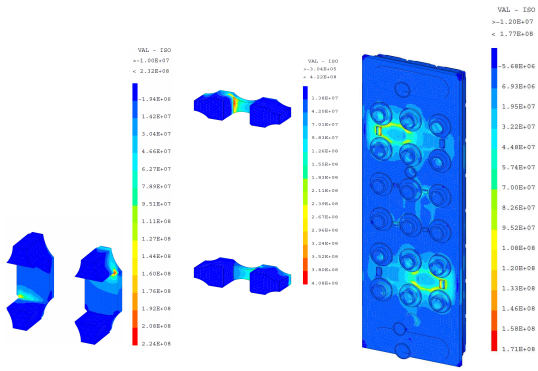

Figure 7: Von Mises Stresses analyses

HE LOOP ANALYSIS

An analysis of the helium loop has been performed in order to assess the possibility of reducing the size of the main components of the Helium Coolant System, the required space to install the components exceeding the space which is provided inside the vault. It was found that:

- Heat exchangers (cooler and recuperator) could be reduced by using plate type Heatric heat exchanger. Effectiveness and pressure droop loss are close to the baseline. Size is approximately half of the reference one.
- A better compactness is practicable, but maintenance will be more difficult.

CONCLUSIONS

Various studies have been performed to modify, optimize, and validate the design of the HCLL Test Blanket Module, focusing on the last version (last ITER operating phase), and detailing specific features of the first version (first ITER operating phase). Future studies will consist in the development of new thermal models in order to give most comprehensive information on the TBM thermal performances and precise temperature fields necessary for the mechanical analyses: they will be performed with the help of new correlation models and homogenisation of breeder unit cells allowing the handling of larger models. Future improvements on the design will focus on the TBM integration in its Port Cell and on the design of mock-ups.

REFERENCES

[1] M. Roccella, “Electromagnetic analyses of TBM HCLL and evaluation of main structural loads on the component”, draft report on the TW2-TTBC-001-D03 deliverable, november 2005

[2] A. Li Puma et al., “Helium Cooled Lithium Lead Test Blanket Module for ITER: engineering design, analyses and test programme and R&D needs”, final report on TW2-TTBC-001-D01 deliverable, SERMA/LCA/RT/05-3568/A, december 2005

REPORTS AND PUBLICATIONS

[1] G. Rampal, Design and analyses of the HCLL TBM including design of supporting system and instrumentation integration CEA report SEMT/BCCR/RT/06-004/A.

TASK LEADER

Gilles RAMPAL

DEN/DM2S/SEMT
CEA-Saclay
F-91191 Gif-sur-Yvette Cedex

Tel. : 33 1 69 08 41 44
Fax : 33 1 69 08 94 26

e-mail : gilles.rampal@cea.fr

TW5-TTBC-001-D02

Task Title: TBM DESIGN, INTEGRATION AND ANALYSIS FINALIZATION OF THE CONCEPTUAL DESIGN OF THE PROTOTYPICAL HCLL TBM MOCK-UP

INTRODUCTION

Within the framework of the development of Test Blanket Modules (TBM) for ITER, out of pile test campaigns are foreseen to qualify components, functionalities, and systems to guarantee that insertion of TBM in ITER will not affect its safety. This qualification program prior to ITER is foreseen in dedicated facilities and includes:

- the testing of the sub-components design and fabrication technology (First Wall, Breeder Units, Back Manifolds) from small to 1/1 mock-ups
- in scale functional tests 1/4 TBM (PbLi loop with and without TBM, TBM structure, TBM structure and Breeder Units)
- 1/1 TBM mock-up tests
- Electro Magnetic TBM (EM-TBM, for ITER H-H phase) acceptance tests

In particular, a relevant medium-scale (1/4) prototypical mock-up (PMU) is foreseen and will be tested in the European Breeding Blanket Testing Facility (EBBTF) in Brasimone, Italy. The objective of the deliverable TW5-TTBC-001-D02 is to finalize the conceptual design of this prototypical mock-up (preliminary design studied in the TW4 work program, task TW4-TTBC-001-D01) including the definition of operating parameters for test relevancy and instrumentation.

2005 ACTIVITIES

TEST OBJECTIVES

The out of pile testing of a HCLL TBM prototypical mock-up in the EBBTF facility has two main objectives:

- to operate the mock-up with the main ancillary circuit under real conditions;
- to validate the TBM design and manufacturing before 1/1 TBM prototype fabrication.

The functional tests foreseen in the EBBTF facility are the following:

- Testing of heat removal from First Wall and Breeding Zone: the 0.5 MW/m^2 plasma thermal radiation on the First Wall will be simulated by external heaters (CC resistors); the internal deposited power will be simulated by heater plates inside the Breeding Zone.
- Testing of thermo-mechanical withstanding by simulating nominal and accidental (Loss Of Flow Accident, Loss Of Coolant Accident…) conditions
- Testing of H (or D?) control (saturated at PbLi inlet): permeation towards the coolant, measurement of H concentration in the circuit
- Testing of instrumentation and validation of test procedures for ITER
- Testing under real operative conditions and validation of ancillary circuit components (Coolant Purification System, Tritium Extraction System, …)

MOCK-UP DESIGN

The design of the mock-up is based on:

- The relevancy with the first TBM for ITER (ref. [1] and [2]): similar velocities and flow path for helium and PbLi, similar heat levels (First Wall, Cooling Plates), similar mechanical behaviour with regard to the pressure loads, similar manufacturing / manufacturing sequence…
- The power managed by the EBBTF facility
- Simplification of the TBM features out of testing purposes

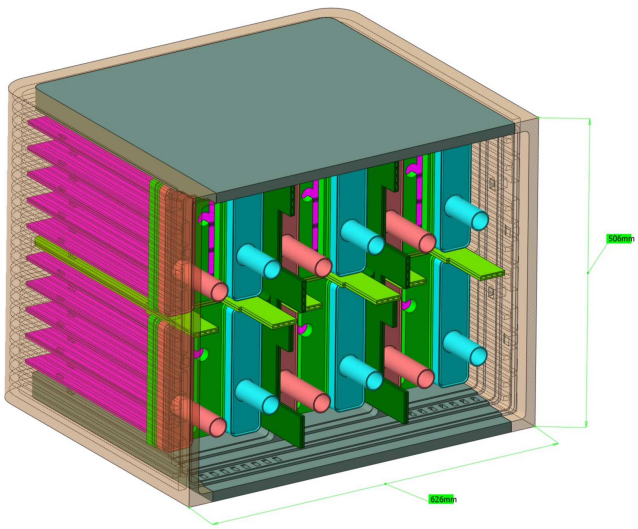

Figure 1: Conceptual design view of the TBM Prototypical Mock-Up

Table 1: Main data on the PMU design

Box structure			
FW thickness	25 mm		
Steel mass	480 kg		
Total mass	1250 kg		
FW max. temperature (°C)	533		
Helium scheme			
FW channels dimensions	14 x 15 mm^2		
He mass flow	0.34 kg/s		
He inlet T	300°C		
He outlet T	#459°C		
Total pressure drop (bar)	1.97		
FW He velocity (min., ave., max. - m/s)	61,30	64,75	73,69
SP He velocity (min., ave., max. - m/s)	3,46	3,61	3,78
CP He velocity (min., ave., max. - m/s)	3,59	3,79	4,11

PbLi scheme			
PbLi number of recirculation per day		10	70
PbLi mass flow (kg/s)		0.089	0.623
Volumetric flow (m^3/h)	Mock-up	0.0327	0.229
	Cells column	0.0109	0.0763
PbLi velocity (mm/s)	Mock-up feeding pipe	5.7	40
	BU cross section	0.09	0.65
	FW opening	3	21

Based on these assumptions, the conceptual design of the mock-up presents the following characteristics (figure 1):

- The power managed by the EBBTF facility is 350 kW: the mock-up will represent a quarter of TBM (the total power deposited in TBM is 1200 kW).
- To keep a similar geometry, the mock-up will represent a 6-cells portion of the TBM (3 horizontal cells x 2 vertical cells), insuring the consistency of the dimensional parameters.
- In order to reach the same He velocity, the FW prototypical mock-up will have to be cooled, as the TBM, by 4 passes channels.
- The simplifications that are envisaged with regard to the TBM features include:
  - Full Stiffening Plates with reduced thickness to get the equivalent cross-section of a TBM Stiffening Plate with internal channels.
  - Simplification of the Cooling Plates channels compared to the TBM, keeping the objective of evaluating the H permeation towards the He.
- Heaters in the PbLi bed, simulating the heat power deposition due to the neutron flux are necessary to allow permeation tests at relevant temperatures.

Various calculations have been performed to determine the Helium flow scheme parameters and data, leading to the scheme presented in figure 2.

The main design characteristics are synthesized in table 1.

SIMULATION OF THE HEAT INTERNAL DEPOSITION

Heater plates have been designed in order to simulate the deposited power, with a variable profile, in the PbLi. They will be constituted with a resistive cable (Ø2.5 mm) with steel sheath and fixed on a steel frame with a variable pitch to reproduce the power profile (see figure 3). Each heater plates will be equipped with 2x2 kW electric power heater elements, supplied with 220 V.
The main issues are related to the sheath corrosion in PbLi: the stainless steel is not suitable because of its high corrosion rate in PbLi. The envisaged solutions, to be experimentally validated (in DIADEMO facility?), are the following:

- rotection of stainless steel sheath heaters, with a ferritic cover sheath, or aluminized coating;
- ferritic steel sheath;
- tight ferritic box enclosing the stainless steel sheath heaters.

One other important issue resides in the big diameter of the heater plates connectors, which could take a lot of the available space in the back face.

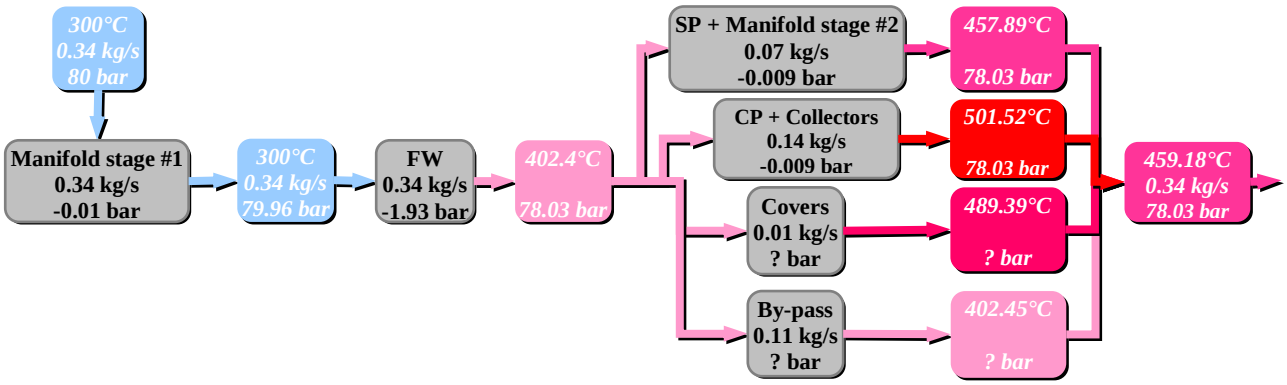

Figure 2: PMU Helium flow scheme

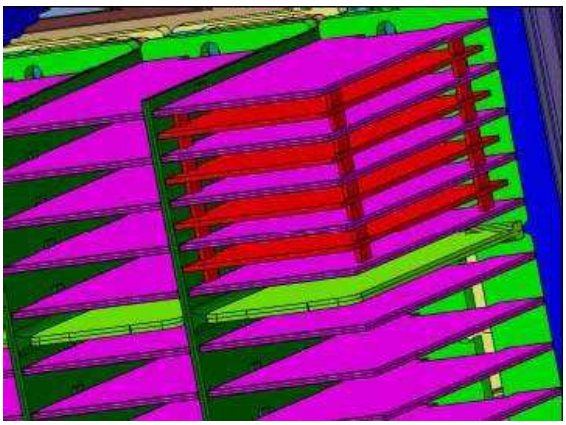

Figure 3: Conceptual design of the heater plates frame

CONCLUSIONS

The main functional data for the design of a HCLL TBM Prototypical Mock-Up have been identified, and conceptual drawings have been produced. The next steps of the design are identified under the deliverable TW5-TTBC-001-D05, in which final drawings of the mock-up have to be produced, and internal and external heating devices have to be defined. This work will require some information exchange with EBBTF facility management: He and PbLi circuits constraints (mass flow range, temperatures range, connexions, overall dimensions) and test constraints (application of boundary conditions in normal and accidental simulations, measurability of H or D in the He coolant, instrumentation). Comments on fabrication constraints will come from TTBC-002 experts.

REFERENCES

[1] A. Li Puma et al, “Helium Cooled Lithium Lead Test Blanket Module for ITER: engineering design, analyses and test programme and R&D needs”, final report on TW2-TTBC-001-D01 deliverable, SERMA/LCA/RT/05-3568/A, december 2005

[2] G. Rampal et al, “Design and analyses of the HCLL TBM including design of supporting system/connections and instrumentation integration”, final report on TW5-TTBC-001-D01 deliverable, to be issued

TASK LEADER

Jean-François SALAVY

DEN/DM2S/SERMA
CEA-Saclay
F-91191 Gif-sur-Yvette Cedex

Tel. : 33 1 69 08 71 79
Fax : 33 1 69 08 99 35

e-mail : jfsalavy@cea.fr

TW5-TTBC-001-D03

Task Title: TBM DESIGN, INTEGRATION AND ANALYSIS PIE AND HOT CELL REQUIREMENTS FOR THE HCLL TBM

INTRODUCTION

The definition of the ITER building and especially of the Hot Cell building features is a key issue that has been already extensively studied by the ITER Team. The impact of the TBM testing programme in ITER on the RH and Hot Cell facility has to be evaluated (operation schedule, storage, repairing, etc.). For that the hot cell needs for TBM maintenance operations (replacement, inspection, repairing, storage, PIE) have to be identified and compared to the ITER capabilities. Discrepancies have to be discussed with the ITER team for definition of common solution.

2005 ACTIVITIES

A preliminary assessment of the Post Irradiation Examination (PIE) requirements has been performed in the TBWG framework [1]. A memo on the problematic concerning the shipping cask development have been produced.

PIE REQUIREMENTS

In the framework of this subtask, the first exercise has been to produce a preliminary list of needed PIE. It is shown in table 1.

Table 1: Description of HCLL TBM PIE Needs

Operation Type	Object	Description/related issue	Comment
Visual inspection	TBM	Preliminary inspection	From external
Metrology	TBM	Check of box deformation	From external
Cutting (& RH)	TBM	Removal He collector from TBM (Open box) Access to internals	Cut at back plate (BP)/ FW welds Cut at tubes/BP welds
Cutting (& RH)	He collector	Dismantle He collector for inspection	Cut all BP/tube welds No PbLi residuals
Cutting (& RH)	TBM without He collector	Removal of Breeder Cooling Units (BCU) for access to internals	Cut spot welds Extraction could be difficult due to residual PbLi (local heating required)
PbLi removal from steel surface	BCU	Removal of residual PbLi from BCU steel surfaces in view of PIE (corrosion, crack initiation, etc.)	Process to be defined
Pressure test (He)	BCU	Identification of leaks	Requires flange welding and He (static) at high pressure, temperature
Visual inspection	BCU	Identification of zones for PIE (corrosion, crack)	
Cutting	BCU	Cutting specimens out of Cooling Plates(CP) for mechanical tests	Small specimens (few mm thick) Prepare “V” notch (resilience tests)
Metallographic examinations	CP specimens	Examination of diffusion bonding area	
Mechanical test	CP specimens	Evaluation of mechanical properties	(Traction, resilience, etc.)
PbLi removal from steel surface	Box (FW+SG+ cover assembly)	Preparation of box for inspection (corrosion, cracks initiation, etc.)	Process to be defined
Visual inspection	Box (FW+SG+ cover assembly)	Identification of zones for PIE (corrosion, crack)	
Cutting	FW+SG+ cover assembly	Cutting of specimens out of Stiffening Plates (SP) and FW for mechanical tests	Small specimens (few mm thick) Prepare “V” notch (resilience tests)
Metallographic examinations	SP, FW specimens	Examination of the diffusion bonding area	
Mechanical test	SP, FW specimens	Evaluation of mechanical properties	(Traction, resilience, etc.)
Disposal	All remaining subcomponents, PbLi residuals, effluents	Storage of contaminated materials	

Given to the TBWG, this list has permitted to progress in the discussions between parties concerning the PIE availability in ITER and several scenarios have been examined.

Due to the late availability of the activation analysis results, the deliver of the subtask aiming to determine the waste level has been delayed. As a consequence, the second part of the PIE analysis, concerning the precise description of what can be practically envisaged in terms of PIE in existent hot cells has not been yet performed.

The TBWG thoughts about the global strategy on PIE, which aim to propose a common understanding of the situation and discuss it with the ITER project to see if the needs can cope with the available space in the buildings, have led to 4 possible scenarios:

1. TBM shipped back to the country of origin or partner party after testing in ITER

2. Specimen Preparation + PIE

3. Specimen Preparation Only (PIE done at the host country)

4. Specimen Preparation + limited PIE at ITER site (i.e., ceramic breeder pebble bed integrity)

To contribute to these discussions, a memo concerning the problematic of development of a shipping cask able to transport a TBM to the host country has been produced [2].

REFERENCES

[1] A. Ying & al., chapter 7 (RH&HC) of the “Report from the re-established Test Blanket Working Group (TBWG) for the period of the ITER Transitional Arrangements (ITA)”, september 2005.

[2] D. Hyvert, J-F. Salavy, CEA/DEN/DM2S Memo on shipping casks, december 2005

TASK LEADER

Jean-François SALAVY

DEN/DM2S/SERMA
CEA-Saclay
F-91191 Gif-sur-Yvette Cedex

Tel. : 33 1 69 08 71 79
Fax : 33 1 69 08 99 35

e-mail : jfsalavy@cea.fr

TW5-TTBC-001-D06

Task Title: FURTHER THERMAL-HYDRAULICS AND DESIGN STUDY RELATED TO THE CHOICE OF REFERENCE He COOLING SCHEME FOR THE HCLL TBM

INTRODUCTION

In the current HCLL DEMO Blanket design, helium scheme is such as the First Wall (FW) and the Stiffening Plates (SPs) are cooled in parallel at first, then the He passes in the Cooling Plates (CPs). This schema allows cooling with "cold He" components having a structural functions, while guaranteeing an He outlet temperature of 500 °C, as suitable to obtain interesting thermodynamic efficiency. Thanks to the fact that only one portion of the He mass flow circulates in the stiffening plates allows, furthermore, to reduce the SPs channels cross section and then the SPs thickness so increasing the breeder material (LiPb) content in the breeder zone. The He mass flow distribution, i.e. the balance of the pressure drops between the FW and in the SPs, on the other hand, relies on the use of appropriate flow limiters in the SPs.
The scope of this task is to assess alternative He flow schemes avoiding any external control of the He mass flow and to define a reference He scheme for the HCLL DEMO blanket to be applied on the HCLL TBM for ITER. The impact on the module design will also be assessed taking into account the need of sharing as much as possible the fabrication technology with the Helium Cooled Pebble Bed (HCPB) TBM.
It is noted that such a selection can be only performed by comparing all aspects of DEMO operation and requirements. Having to be DEMO-relevant, HCLL TBMs design will have to be in conformity with the reference choice made for the DEMO HCLL blanket.

2005 ACTIVITIES

2005 activities are dedicated to DEMO hydraulic analysis. In the current HCLL DEMO blanket module design [1] the 80% of the He mass flow circulates in the FW and the 20% in the SPs (figure 1). The needed mass flow distribution will rely on the use of appropriate diaphragms aiming to equalize the pressure drops in these components. The dimensioning of these diaphragms, as well their manufacturing tolerance could affect in a significant way the cooling efficiency. However, in the HCPB design, the different elements are cooled in series, leading to different geometrical characteristics for the FW and the SP design.
In the present study, 3 different configurations have been analysed in terms of thermal hydraulic performance. This means that, the criteria to satisfy are expressed in terms of temperature and the ratio between the pumping power and the fusion thermal power.

- Tmax < 550°C
- temperature interface Eurofer / Lithium Lead < 500°C
- power ratio = Pumping power / fusion thermal power < 10%

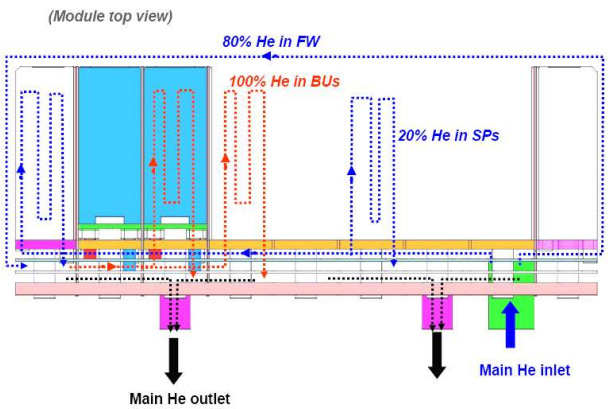

Figure 1: Helium flow scheme

In former analysis, the Dittus-Bolter correlation was used in the thermal design. However, intrinsically, this correlation can not be applied to helium first due to its Prandtl number but also due to its Reynolds range. Therefore, bibliographic analyses of Nusselt correlation that can be used for helium have been performed. Three different correlations have been found, a gas correlation [3], the Mac Eligot [4] correlation and the Gnielinski correlation [5]. The figure 2 plotted the ratio of this new Nusselt correlation to the Dittus-Bolter correlation. It appears that the Dittus-Bolter correlation over estimate the Nusselt coefficient at least by 1.15 times. This over estimation is very pronounced for low Reynolds number.

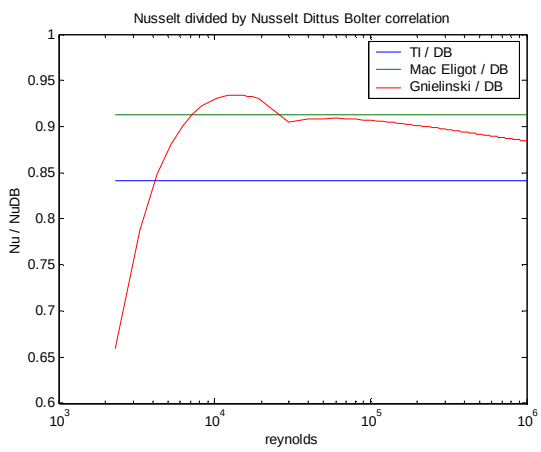

Figure 2: Nusselt ratio

The following design used the Gnielinski correlation which covers the range of validity 2300 < Reynolds < 10^{+6} and 0.5 < Prandtl < 10^{+5}, which is, according to Bejan [6], accurate within ± 10 %.

HCPB GEOMETRICAL DIMENSIONS OF FIRST WALL AND STIFFENING GRID

Dimensions have been found in the HCPB TBM design [2]. They are presented in table 1.

Table 1: Main HCPB dimensions in mm

	thickness	channels
FW	30 (5 – 16 – 9)	16 x 12.5
SG	11 (2.5 – 6 – 2.5)	6 x 10

MAIN GEOMETRICAL ASSUMPTIONS

One module contains 9 toroidal by 8 poloidal breeder units.
The lithium lead in the breeder volume is a constant so that the radial (800 mm), toroidal (208 mm), poloidal (208 mm) are preserved.
The first wall thickness and cooling plate thickness are preserved.

First wall: single pass, counter flow or parallel flow.
Stiffening plates: Four passes, 3 U turns.
Cooling plates: Four passes, 3 U turns.

MAIN ASSUMPTIONS FOR THE THERMAL STUDY

Helium at 8 MPa pressure and 300-500°C inlet and outlet temperatures is used as coolant.
Helium is supposed to be a compressible gas under low Mach number assumption [4].
Surface heat flux on FW is 0.5 MW.m^{-2}.
Neutron Wall Loading is 2.4 MW.m^{-2}.

The pumping power is calculated according to the following formulae:

$$\Delta W = \frac{\Delta p \, \dot{m}_T}{\rho \eta_p}$$

Where Δp is the pressure drops in the module, $\dot{m}_T$ is the mass flow in the module, ρ the density at the pump inlet admission and η_p, the pumping efficiency (0.87).

Nusselt number is estimated using the Gnielinski correlation.

Heat from lithium lead is recovered by FW, SP, and CP using a global transfer coefficient, ratio of the product of the global heat transfer coefficient by the wetted surface to the sum of global transfer coefficient.

$$\alpha_i = \frac{h_g^i S_i}{h_g^{FW} S_{FW} + h_g^{SP} S_{SP} + h_g^{CP} S_{CP}}$$

Pressure drops are computed by integrating the conservation of momentum for a compressible ideal gas element, using the low Mach approximation. The total pressure drops is the sum of the friction loss, the compressible loss and the singularity loss. This leads to the following expression:

$$\Delta p_T = \Delta p_f + \Delta p_c + \Delta p_s = \frac{RT_1}{2p_1}\left(\frac{\dot{m}}{A}\right)^2 \left[f\left(\frac{P_f L}{A}\right)\frac{\bar{T}}{T_1} + \left(\frac{T_N}{T_1} - 1\right) + \sum_{n=1}^{N} \varsigma(T_n)\frac{T_n}{T_1} \right]$$

Where T is the temperature in Kelvin degree, p is the pressure, f is the fanning friction factor, P_f is the wetted perimeter, A the wetted surface, L the channel length, ζ the singularity pressure drop coefficient.

DESCRIPTION OF THE STUDIED CONFIGURATIONS

Three configurations have been analysed. The main geometrical characteristics of the module components, FW, SP and CP are presented in table 2.
He enters from the rear through two inlet tubes of 140 mm internal diameter. It is spread out in the first chamber (between BP1 and BP2) to feed the FW channels. After cooling this component, He exits in the 2nd chamber, between the BP2 and the BP3, cooled the SP and the covers and exit in the 3rd chamber.

Table 2: Studied configurations presentation

	configuration	Thickness	decomposition	channels	pitch	decomposition	inlets
First Wall	Parallel	25	4 + 14 + 7	14 x 15.6	21.6	15.6 + 6	82
	Series 1	25	3 + 15 + 7	15 x 16	21.9	16 + 5.9	82
	Series 2	25	3 + 15 + 7	15 x 16	21.9	16 + 5.9	82
Stiffening Plates	Parallel	8	2.5 + 3 + 2.5	3 x 10	11.125	9 + 2.125	4
	Series 1	11	2.5 + 6 + 2.5	6 x 12	14.83	12 + 2.83	3
	Series 2	11	2.5 + 6 + 2.5	6 x 9	11.125	9 + 2.125	4
Cooling plates	Parallel	6.5	1 + 4.5 + 1	4.5 x 4.5	6.4	4.5 + 1.9	8
	Series 1	6.5	1 + 4.5 + 1	4.5 x 4	6.4	4 + 2.2	8
	Series 2	6.5	1 + 4.5 + 1	4.5 x 4	6.4	4 + 2.2	8

Table 3: Dimensions, deposited power and total mass flow for the studied configuration

Configuration	Dimensions (r x t x p) in m	Deposited power MW	Total mass flow kg s^{-1}	Pressure drop (MPa)	Power ratio
Parallel	0.8 x 1.996 x 1.79	10.32	9.95	0.192	3.3 %
Series 1	0.8 x 2.02 x 1.811	10.50	10.125	0.347	6.1 %
Series 2	0.8 x 2.02 x 1.811	10.56	10.175	0.380	6.7 %

HYDRAULIC RESULTS

Table 4: Presents the main hydraulic results for the 3 configurations

	Configuration	Deposited Power (MW)	Recovered power (MW)	Total mass flow (kg s^{-1})	Channel mass flow (g s^{-1})	Pressure drops (MPa)	Tin °C	Tout °C	He average heat transfer coefficient W m^{-2} K^{-1}	He average velocity m s^{-1}
FW	Parallel	2.78	3.13	7.96	97.0	0.123	300	375.8	5344.3	71.7
	Series 1	2.79	2.91	10.125	123.5	0.163	300	355.4	5921.4	81.6
	Series 2	2.79	2.90	10.175	124	0.164	300	354.9	5944.3	82.0
SP	Parallel	0.22	1.26	1.99	3.4	0.123	300	422.6	2383.5	19.1
	Series 1	0.26	2.45	10.125	23.3	0.114	355.4	402.0	4773.2	55.5
	Series 2	0.26	2.33	10.175	17.5	0.124	354.9	399.1	4895.2	55.7
CP	Parallel	0.36	5.93	9.95	3.4	0.064	385.1	500	3230.5	32.1
	Series 1	0.49	5.15	10.125	3.5	0.069	402.0	500	3282.8	33.1
	Series 2	0.54	5.32	10.175	3.5	0.091	399.1	500	3670.2	37.3

Then He passes in the BU inlet collectors, circulates in the BUs CPs and it is routed out, through the BUs outlet collectors and the BUs outlet tubes, to the 4rd chamber between the BP4 and the BP5. It leaves the module through 6 outlet pipes of 94 mm diameter. This description highlights the need for an additional chamber, increasing the He inventory but also the shielding effect.

According to the prescribed assumptions, the module dimensions, the deposited power and the mass flows are presented in table 3.

CONCLUSIONS

Hydraulic and engineering thermal analyses have been carried out. First results are encouraging to consider a series solution.

REFERENCES

[1] A Li Puma & al, Helium Cooled Lithium Lead Blanket Module for DEMO – Designs and Analysis, CEA report, DM2/SERMA/LCA/03-3297.

[2] R. Meyder & al, Report on conceptual design of the four TBM's and related performance analysis, FZK report, FU-TF1.2-03/005/01-R.

[3] J. Huetz and J.P Petit, Notions de transfert thermique par convection, Techniques de l'Ingénieur, A 1540.

[4] G. Melese and R. Katz, Thermal and Flow Design of Helium-Cooled Reactors, American Nuclear Society, 1984.

[5] V. Gnielinski, New equations for heat and mass transfer in turbulent pipe and channel flow, International Chemical Engineering, vol 16, n°2, pp 359-368, 1976.

[6] A. Bejan, Convection Heat Transfer, 2nd Edition, John Wiley and Sons, 1994.

TASK LEADER

Franck GABRIEL

DEN/DM2S/SERMA
CEA-Saclay
F-91191 Gif-sur-Yvette Cedex

Tel. : 33 1 69 08 79 76
Fax : 33 1 69 08 99 35

e-mail : franck.gabriel@cea.fr

TW5-TTBC-001-D07

Task Title: TBM DESIGN, INTEGRATION AND ANALYSIS DETAILED TBM DEVELOPMENT WORKPLAN UP TO EM-TBM INSTALLATION IN ITER

INTRODUCTION

In order to be able to install a HCLL Test Blanket Module (TBM) in day 1 of ITER operation (~2015), as envisaged up to now in the testing strategy for EU concepts of breeding blankets, it is necessary to establish both a detailed HCLL TBM development workplan up to EM-TBM fabrication and installation in ITER and a Project technical specification document. These documents will be a basis to identify the activities (on R&D, analyses, needs of out of pile test, supplies and fabrication,…) to be launched, and will help to follow the project taking care of the critical path.
The objectives of the deliverable are:

i) to produce a detailed HCLL TBM development workplan (MS-Project), and

ii) to produce a first version of a Project technical specification document.

2005 ACTIVITIES

The list of all the needed activities (R&D and mock-ups/prototype/TBM production) to be performed before the installation of a HCLL TBM in ITER has been preliminarily established. A provisional time schedule has then be associated to each activity in a first version of a MS-Project development workplan sequencing all foreseen activities. This first workplan has been crossed with the one produced by the HCPB team (FZK), discussed with EFDA, and a common European Work Breakdown Structure (WBS) has been presented to the European TBM ad'hoc group.

MS-PROJECT DEVELOPMENT WORKPLAN

The first version of the MS-Project development workplan has detailed about 300 elementary tasks. The synthesis in terms of recapitulative tasks is shown on figure 1.

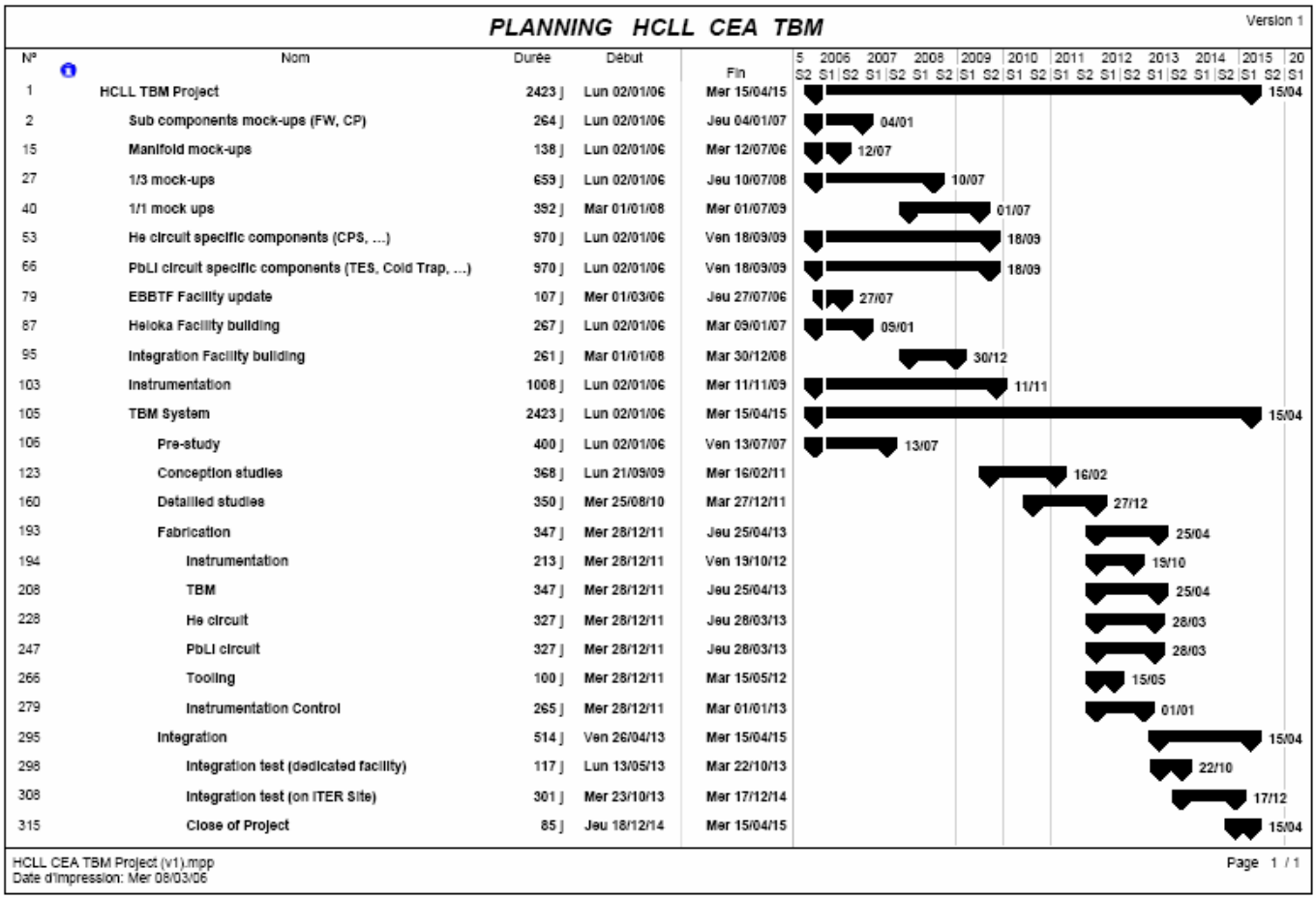

Figure 1: HCLL TBM detailed workplan (synthesis of the recapitulative tasks)

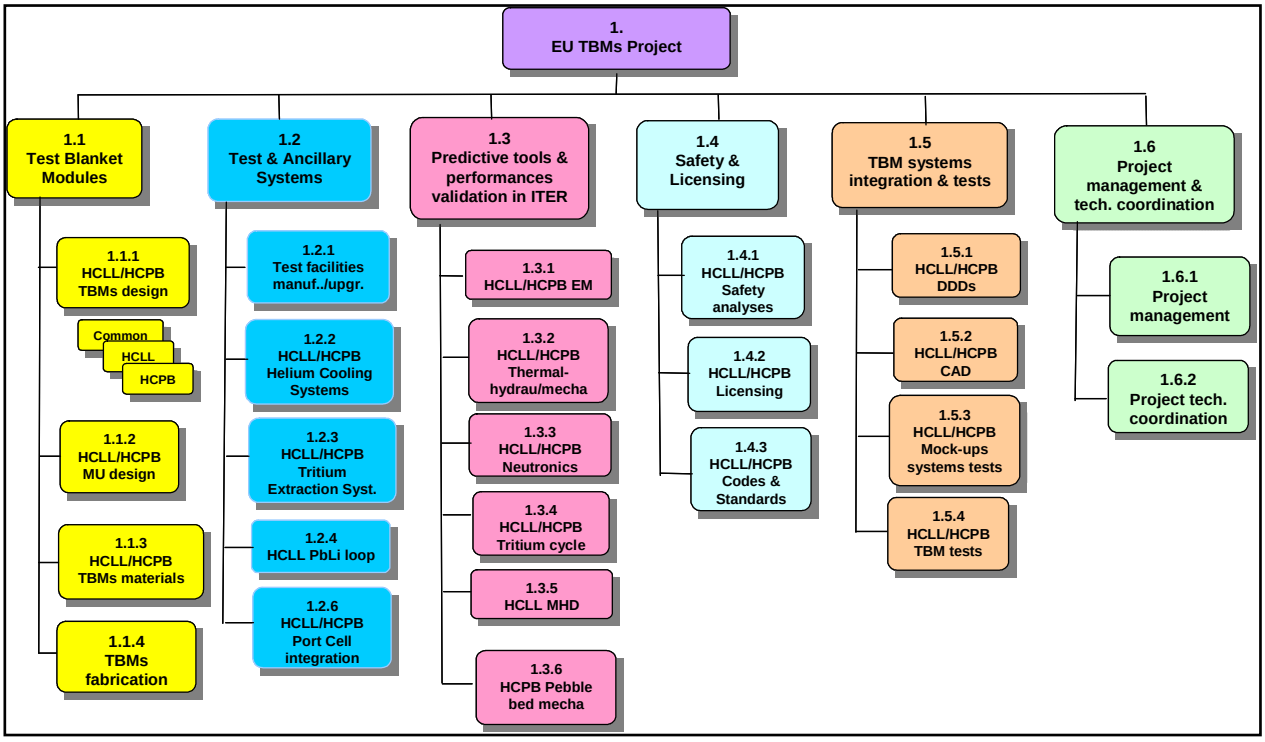

Figure 2: Possible European TBM project Work Breakdown Structure

EUROPEAN TBM PROJECT WBS

Several meetings have been held between TBM project leaders (CEA for HCLL and FZK for HCPB) and EFDA to converge towards a European common position on a possible WBS. This WBS has been presented to the European TBM ad'hoc group, will be discussed during the TBWG meeting, and will be a basic of the risks, planning, costs and resources estimations. View of this WBS up to level 3 is shown on figure 2.

REPORTS AND PUBLICATIONS

[1] J-F. Salavy, Detailed TBM development workplan up to EM-TBM installation in ITER, CEA report SERMA/RT/06-3816/A, to be issued (2006)

TASK LEADER

Jean-François SALAVY

DEN/DM2S/SERMA
CEA-Saclay
F-91191 Gif-sur-Yvette Cedex

Tel. : 33 1 69 08 71 79
Fax : 33 1 69 08 99 35

e-mail : jfsalavy@cea.fr

TW5-TTBC-002-D01

Task Title: TBM MANUFACTURING R&D - DIADEMO MOCK-UP

INTRODUCTION

The objective of this task is to produce an HCLL Cooling Plate mock-up using the laser + HIP fabrication process. This mock-up is intended for testing in DIADEMO testing facilities in the frame of the already committed TW2-TTBC-002-D02 deliverable.
The laser + fabrication process allows to perform very small cooling channels (4 x 4.5 mm², with a 1.5 mm rib) without having the welds facing the Li-Pb bath. In a first step, very thin strips are laser welded on the top of grooves; then a second supplementary plate is HIP welded on the strips.
First laser welds were carried out in 2004 (with 100 mm long channels). In 2005, it is engaged the fabrication of a more than 400 mm long mock-up (the HCLL mock-up for DIADEMO), in order to assess, in an experimental loop, the thermo-mechanical under DEMO relevant operation conditions.

2005 ACTIVITIES

The mock-up to fabricate is shown in figure 1. The length of the mock-up is 444 mm. There is just one He loop through the plate. This mock-up is built with the EUROFER steel.

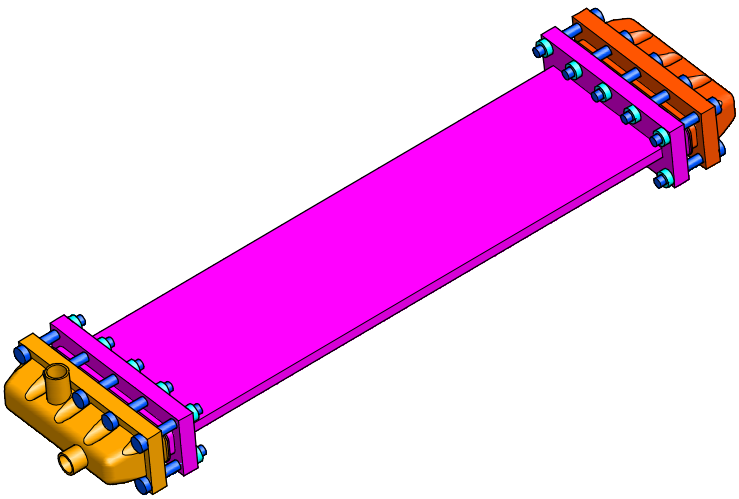

Figure 1: The (laser+HIP) HCLL mock-up for DIADEMO

There are 16 straight cooling channels: 8 cooling channels are bringing He toward the end of the extremity of the mock – up (end cap); the other channels are bringing back the warmed He. This mock-up can be divided into three main parts: the manifold cap, the plate with channels and the end cap. The plate with channels is built with the laser + HIP process; the manifold and end caps are bolted to the plate with channels, with a TIG weld for tightness.

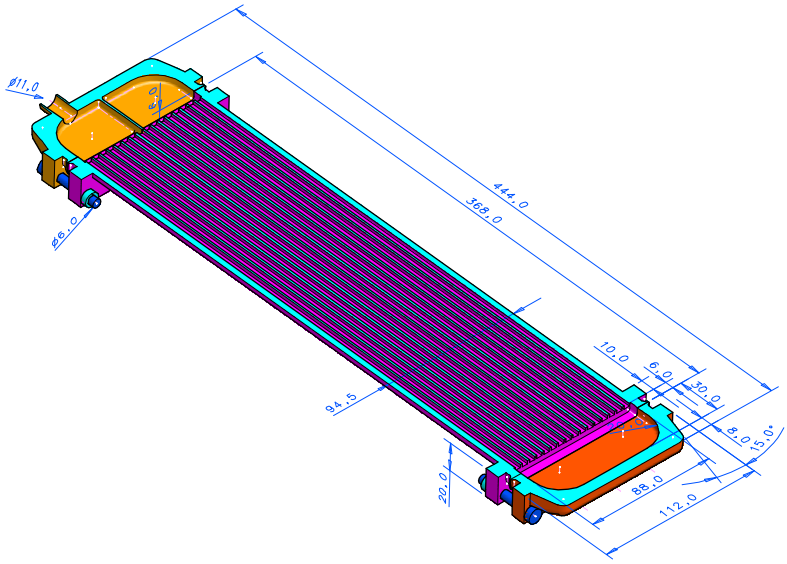

Figure 2: Longitudinal cross section of the (laser + HIP) mock-up for DIADEMO

FABRICATION ROUTE

To fabricate this mock-up, we have to go onto the following steps:

- optimisation of the welding sequence : this step is to fix the welding parameters in order to get sound welds without welding defects (cracks) and in order to minimize the welding distortions;
- machining of the plate with channels, laser welding of a thin plate on each cooling channel, visual, dimensional and tightness controls;
- HIP welding on the laser welds, dimensional control and machining;
- Manifold and end caps machining;
- Inlet and outlet tubes machining;
- TIG welding of the inlet and outlet tubes on the manifold cap;
- TIG welding, for tightness, of the manifold and end caps on the plate with channels;
- Non destructive tests (radiography, tightness);
- Test with pressure in the mock-up before a final tightness test.

STEP 1: LASER WELDING SEQUENCE OPTIMISATION

To get the cooling channels with the laser welding process, we have to (figure 3):

- machine a thick plate (1);
- machine thin plates (2);

Not available on line

Not available on line

Not available on line

TW5-TTBC-005-D01

Task Title: TBM DESIGN, INTEGRATION AND ANALYSIS TBM HCLL INSTRUMENTATION DEFINITION

INTRODUCTION

The TW5-TTBC-005-D01 deliverable was aimed at identifying and analysing the sensors to be installed in the HCLL TBM (Helium Cooled Lithium Lead Test Blanket Module) during ITER operational phases, in order to validate the mechanical behaviour and monitoring the main parameters. In particular, the objectives were:

- To define, on the test objectives basis, the measurements to perform.
- To identify, on the geometry design basis, the localisation of the sensors and the environmental conditions.
- To evaluate the feasibility of the measurements chains to collect data necessary for codes validations.
- To identify the needed developments and specific environmental testing.
- To define a list of potential sensors and the associated monitoring and electronic devices.

2005 ACTIVITIES

TEST CAMPAIGNS OBJECTIVES AND REQUESTED DATA MEASUREMENT ASSOCIATED

Requested data measurement associated to the expected test campaigns objectives are related to structural resistance, operational capabilities, helium thermal-hydraulics, Lithium/Lead magneto-hydro-dynamics, Tritium transport and permeation, Tritium production during D-T phase and Corrosion by LiPb.
A distinction has to be made between the sensors needed for TBM monitoring (the requested typical data being structure temperature, He pressure, displacements/accelerations of the structure) and the sensors related to the experiments foreseen within the TBM that have to be identified in relation with the test programs.

ENVIRONMENTAL CONDITIONS TO BE WITHSTOOD BY SENSORS

The list of environmental conditions has been established. It includes: magnetic field, high electromagnetic fields, gamma and neutron radiation from plasma, shocks during disruptions, high temperature, high Helium pressure, high Helium speed, corrosion by the PbLi, very limited available room inside the TBM, and activation by neutrons.

LIST OF AVAILABLE SENSORS AND IDENTIFICATION OF REQUESTED QUALIFICATION/DEVELOPMENT

The temperature sensors have been evaluated first.

- Optical fibre technology (FiberBragGrating / Fabry Perrot) could be used at the beginning of the test but needs improvements to perform under gamma-neutron radiation and high temperature. Exposing optical fibres to ionizing radiation result in a wavelength-dependent attenuation increase. Even if published data on radiation effects on optical fibres show that SI fibres with nominally pure-silica cores are good radiation resistant, Ge-doped silica-core fibres have been shown to be inferior to pure-silica core fibres when irradiated. They are so strictly limited to grating area. Nevertheless, tests performed in BR2 MTR reactor show a bad behaviour if temperature exceeds 100°C. In our range of temperature interest, FBR are specially fabricated with metallic coated (no magnetic).

They need a coupling fluid in order to limit contact and deformations.

Because of their miniaturization and large capabilities, they could be used at the beginning in parallel with thermocouples in order to monitor deviation.

- Even with grounding and cladding (wires arranged in twisted pairs and inserted in a metal tube) data from classical thermocouple are difficult to process during HF heating. Nevertheless, concluding experiments are related for the divertor of the JET. They should be used as a baseline for temperature monitoring. Accuracy: some degrees.

For thermocouples, the best way will be to fix them directly to the thimbles.
The following figures show examples of temperature measurements performed in the JET fusion device.

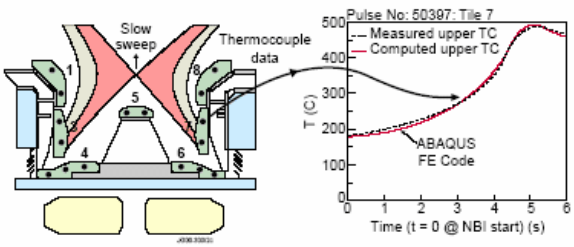

Figure 1: From EFDA-JET Bulletin Autumn 2000

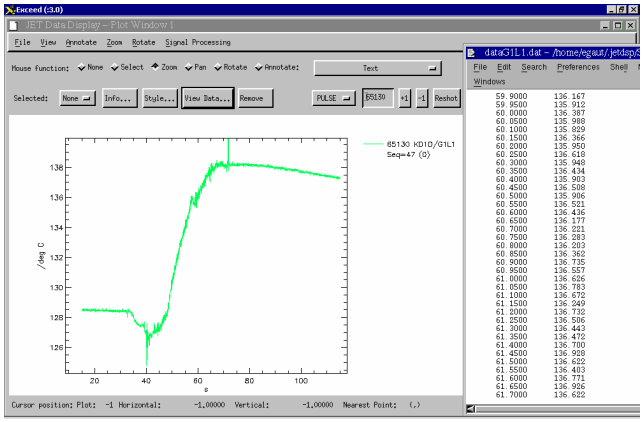

Figure 2: Detail of a T measurement during HF Heating (JET) showing a good behavior
Heating begins at time 40. From 30 to 40, deviation is related to magnetization.

- Integration in TBM via Thimbles have been considered first. They act as a low frequency filter (one second with He as coupling gas during a disruption). This is the baseline for FBG. Pressure compensation has to be done.

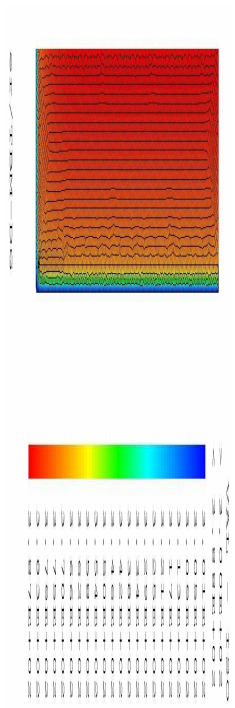

Figure 3: He temperature in thimbles after a disruption

CONCLUSIONS

Because of their large capabilities and reports on their good behaviour under both gamma/neutron radiations, FBG have been evaluated with confidence. It was found that this good behaviour can't be achieved with temperatures higher than 90°C under irradiation. They also need to be thermally coupled (with a gas for example) and so compensated in pressure because of their sensitivity to stress.
Even if they need some (lot of) cares, thermocouples are related to work well in JET divertor.
Our recommendation is to use thermocouples as a baseline for temperature measurement and FBG as strain gages during commissioning.

REPORTS AND PUBLICATIONS

[1] F. Witters, "ITER TBM instrumentation", technical note DTN/STPA/LTCG/2005-077, to be issued

TASK LEADER

Gilles RAMPAL

DEN/DM2S/SEMT
CEA-Saclay
F-91191 Gif-sur-Yvette Cedex

Tel. : 33 1 69 08 41 44
Fax : 33 1 69 08 94 26

e-mail : gilles.rampal@cea.fr